Rolife

Sakura densya

TGB01

With Sakura fluttering in the sky,
whisper your name over and over.

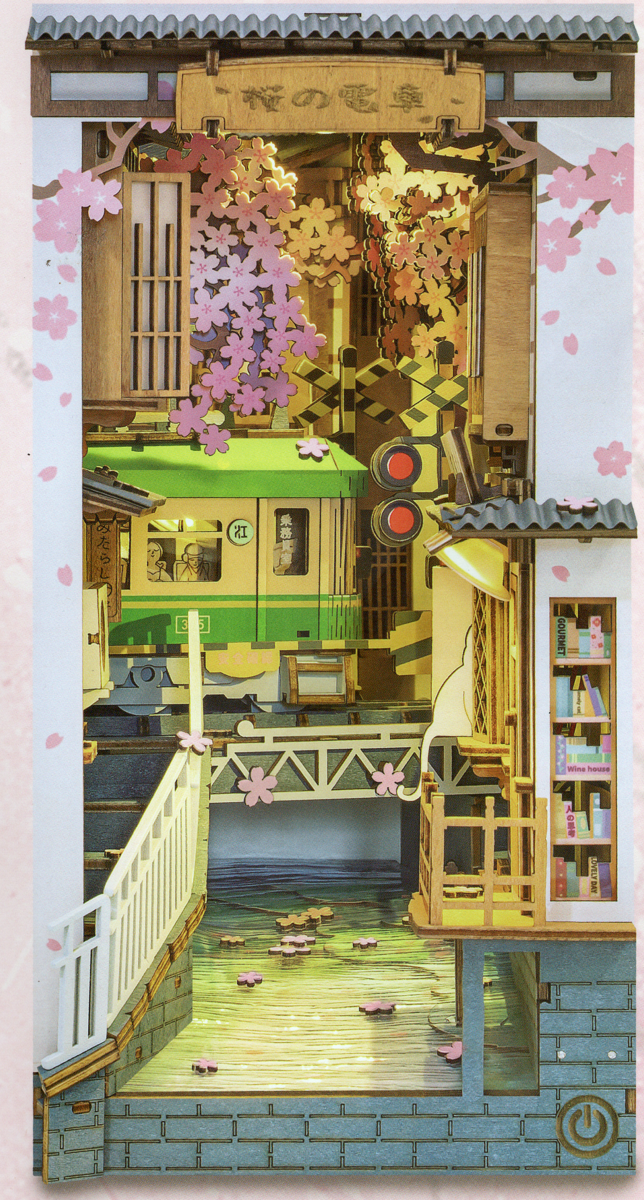
桜の電車
GOURMET
Wine house

Pictures for reference only. Please subject to our existing products.

⚠ WARNING

- Suitable for children over age 14+.Children should be accompanied by adults while assembling our products.
- Some small parts and electronic components are included,children must assemble under the guidance and supervision of adults in case of swallowing by mistake or choking.
- Some auxiliary tools are required to assemble our products.Please choose reasonably to avoid injury.
- Please keep the product away from fire or any place that may cause damage.
- Please don't clean this product with chemical cleaners:alcohol, ammonia water,glass cleaner,etc.
- Please clean the product with clean soft cloth, sand the board bur lightly with sandpaper.
- Please do not use rechargeable battery.

⚠ ATTENTION

- Please read instruction carefully to assure that all parts are intact before assembling.
- Please cut and assemble these delicate parts carefully.Some parts need to be assembled with glue to ensure all parts sticky firmly.
- Assemble electronic components correctly.Test if the circuits work properly after installation.
- Please keep the instruction book for later reference.

★ Due to customs policy in international shipping , the batteries, glue or pigment maynot be included.Please prepare them yourself.

Equipped with 2 controllable lights

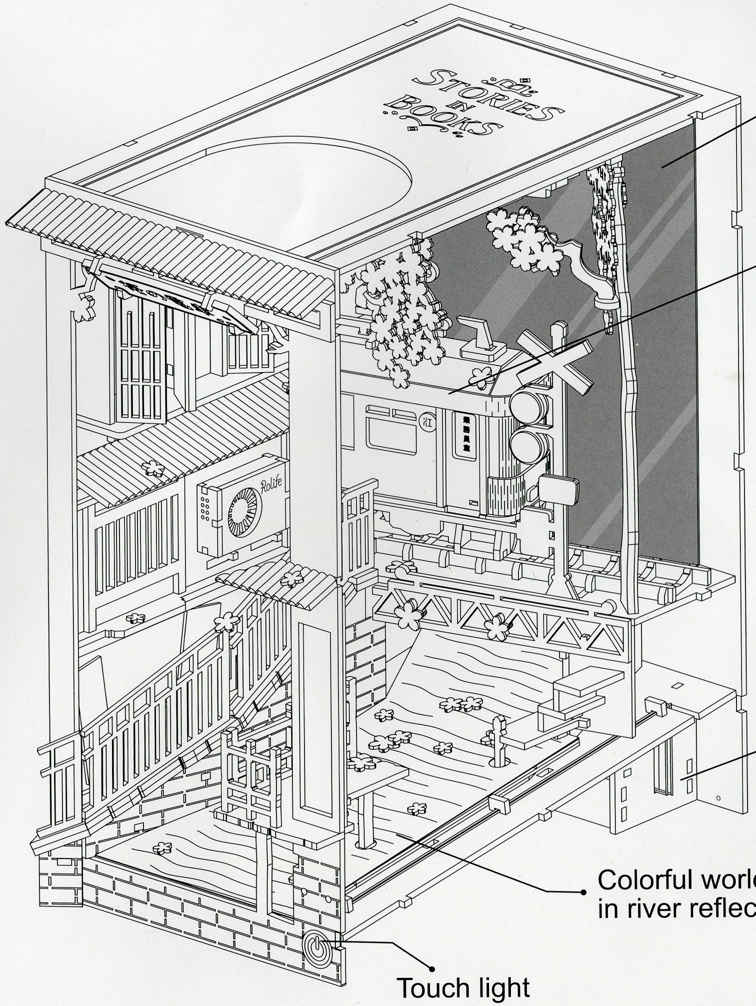

Cut-proof lens deepen the whole space

Equal scaling reduction of wooden trolley

Hidden battery

Colorful world in river reflection

Touch light

Parts list

Bag No.1

Name	Lamp-shade	Lens	Screw-driver	Tape	Angle-irons
No.	P1	P2	P3	P4	P5
Picture	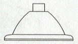	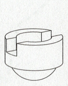	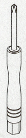	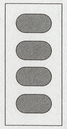	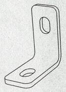
Quantity	1	1	1	1	6

Bag No.2

Fence 1	Fence 2	Fence 3
P6	P7	P8
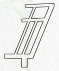	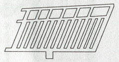	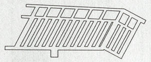
1	1	1

Bag No.3

Name	Battery box	Warm light (Short wire)	Warm light (Long wire)
No.	P9	P10	P11
Picture	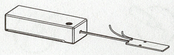	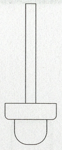	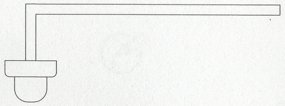
Quantity	1	1	1

Bag No.4

Screws
P12
14

Name	Mirror	Transparent water ripple sheet	White latex	PET	Corrugated paper
No.	P13	P14	P15	P16	P17
Picture	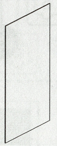	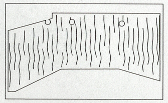	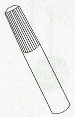	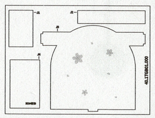	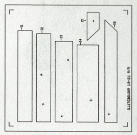
Quantity	1	1	1	1	1

Q&A

Q1:What if there are burrs on the edges of parts?

A1:In order to ensure your safety and its installation accuracy.Please remove the parts first.Then use the included sandpaper to polish the edge burrs of the parts.

Q2:How to deal with loose parts after repeated disassembly?

A2: Apply some glue on joints to fix the parts.

Q3:What need to be considered when assembling the PET and mirror?

A3: Remove the films of PET and mirror before assembling.
Then apply some glue on them and press 5 to 10 seconds.

Q4:What need to be considered when connecting the battery box with the light?

A4: **Twist** the same color wires together.If you connect red with black, it will short out after powering on.The light cannot work properly.

Q5:What if the light cannot work after connecting the battery box with the lights?

A5:1. Firstly,check if wires connection is wrong(Connect same color wires together). Secondly,check if you have loaded the batteries properly and if the switch is turned on.
2. Turn off the Battery Box switch.Then tear off the insulation tape. Check if copper wires are broken and re-connect the wires.

Q6:How to use the touch light?

A6: After assembly,you can touch the switch of the front board lightly and all light beads will be on.

Instructions

1. The light wires diagram of P10 and P11

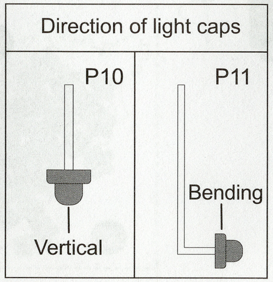

2. Signs illustration

① Step 1 — The printed side
② Step 2 — ☐ The blank side
③ Step 3 — ! Notice
Apply a dab of glue here and press 5s

1

Please read Q&A in the previous page before assembling.

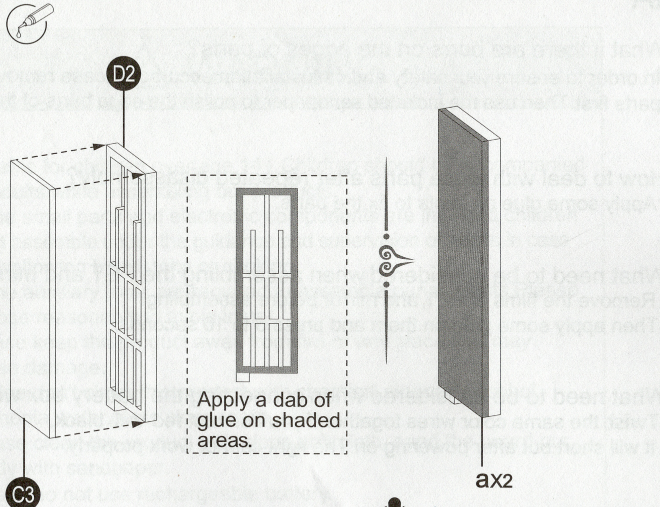

Apply a dab of glue on shaded areas.

Assemble 2 sets of parts.

2

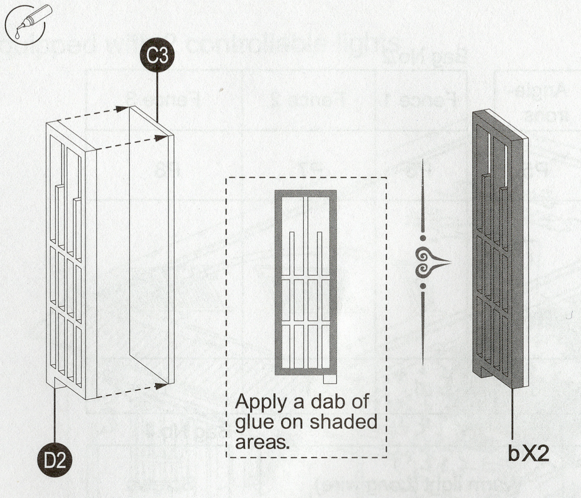

Apply a dab of glue on shaded areas.

Assemble 2 sets of parts.

3

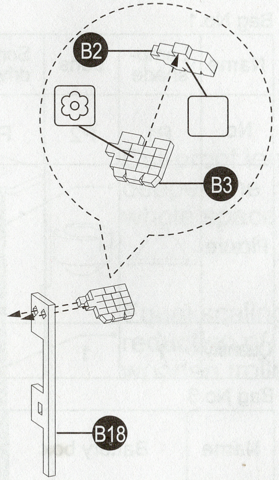

4

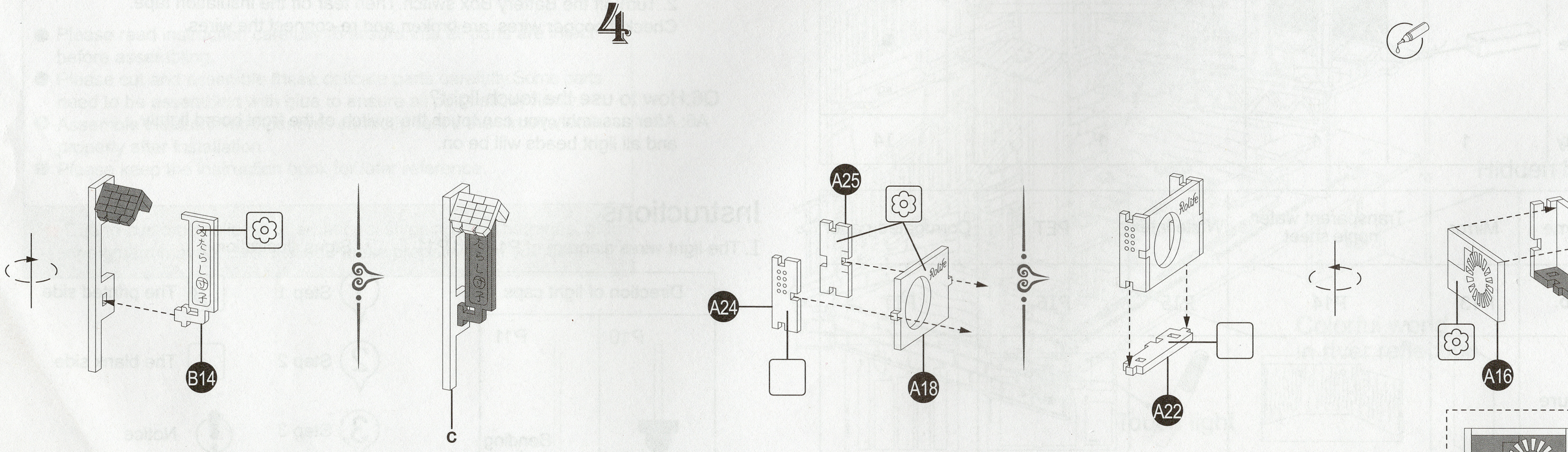
B14
c
A25
A24
A18
A22
A16

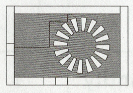

Glue as shown.

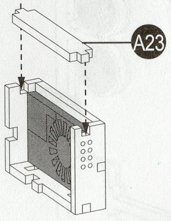

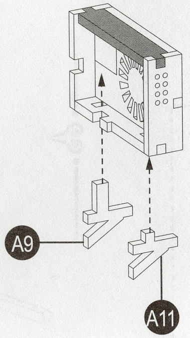

Spare parts for A11 & A9.

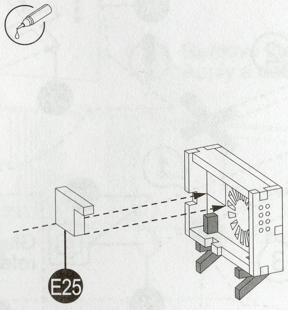

Glue along reference lines.

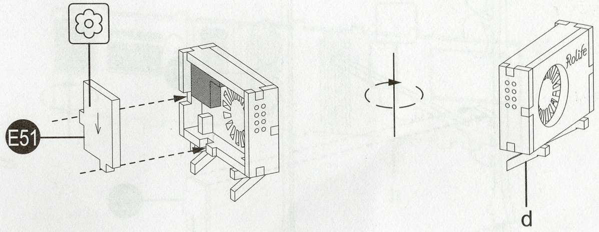

5

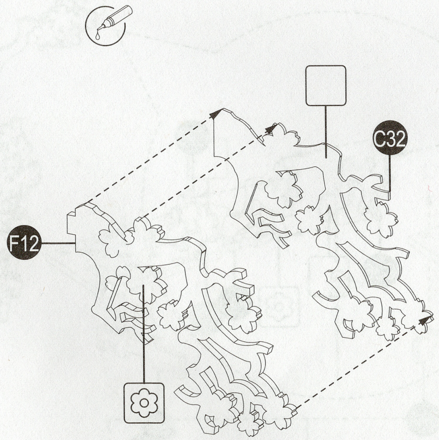

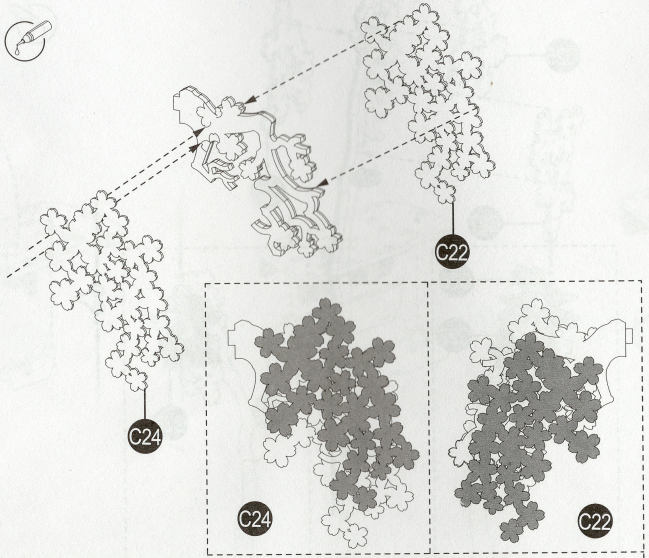
C24
C22
C24
C22

Glue as shown.

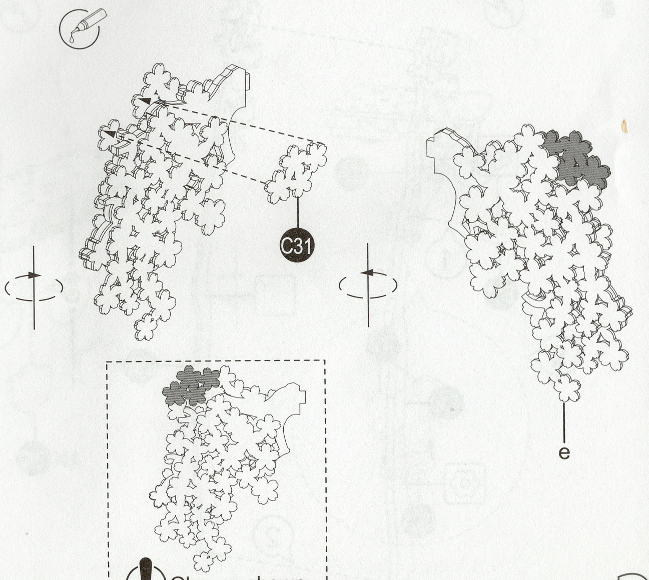

Glue as shown.

6

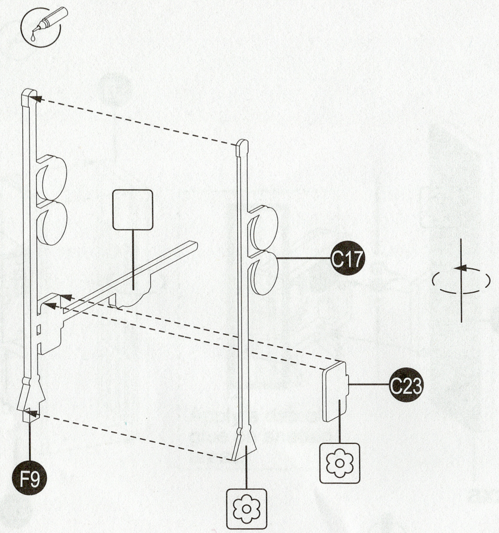

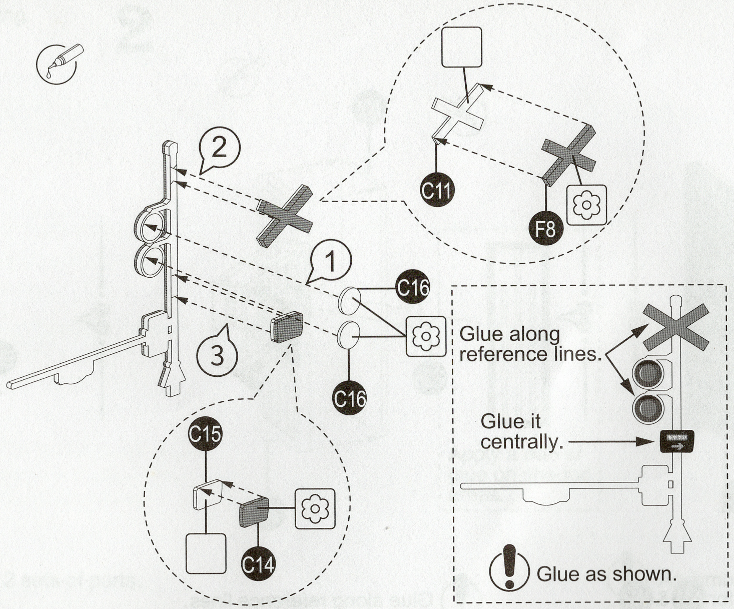
②
①
③
C11
F8
C16
C16
C15
C14

Glue along reference lines.

Glue it centrally.

Glue as shown.

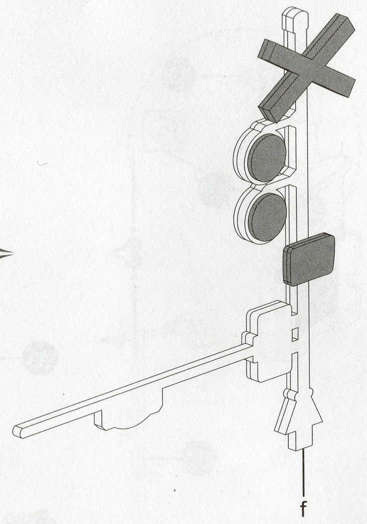

7

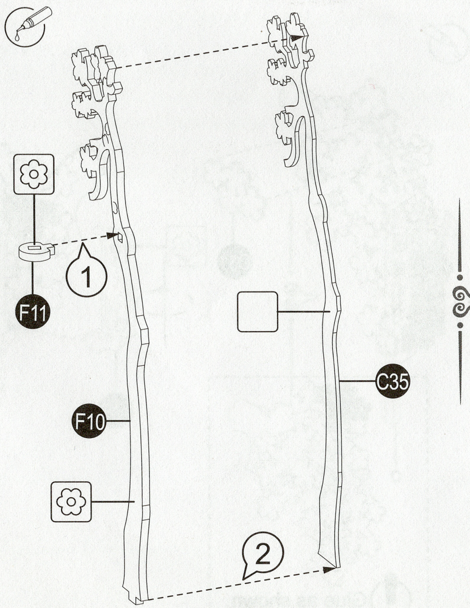
①
F11
F10
C35
②

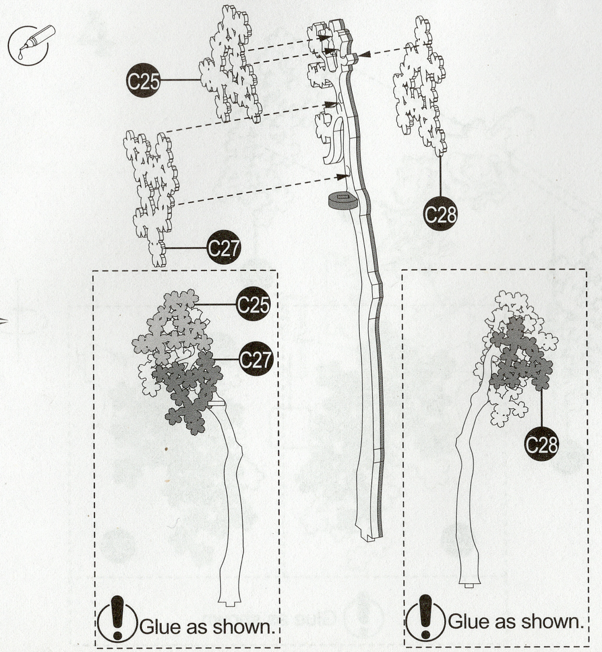
C25
C27
C28
C25
C27
C28

Glue as shown.

Glue as shown.

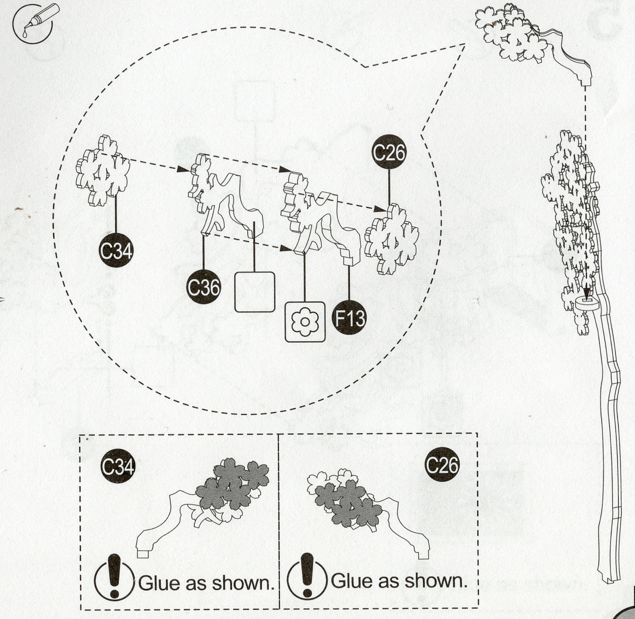
C34
C36
F13
C26
C34
C26

Glue as shown.

Glue as shown.

8

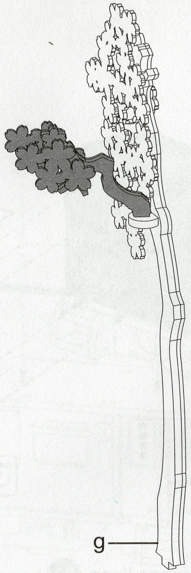

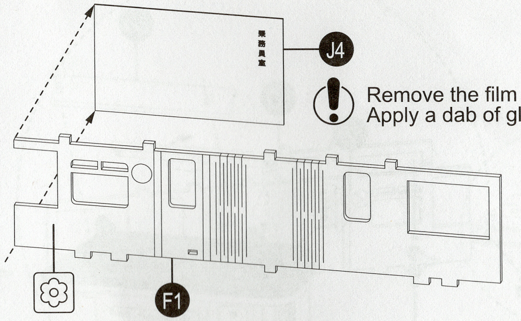

Remove the film of J4 before assembling.
Apply a dab of glue on the back of F1.

Glue J4 as the left figure shown.

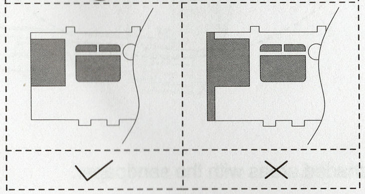

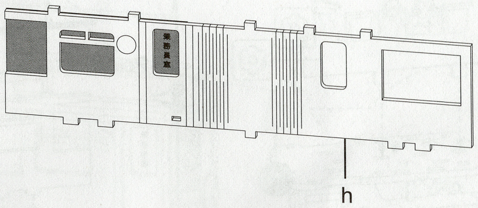

9

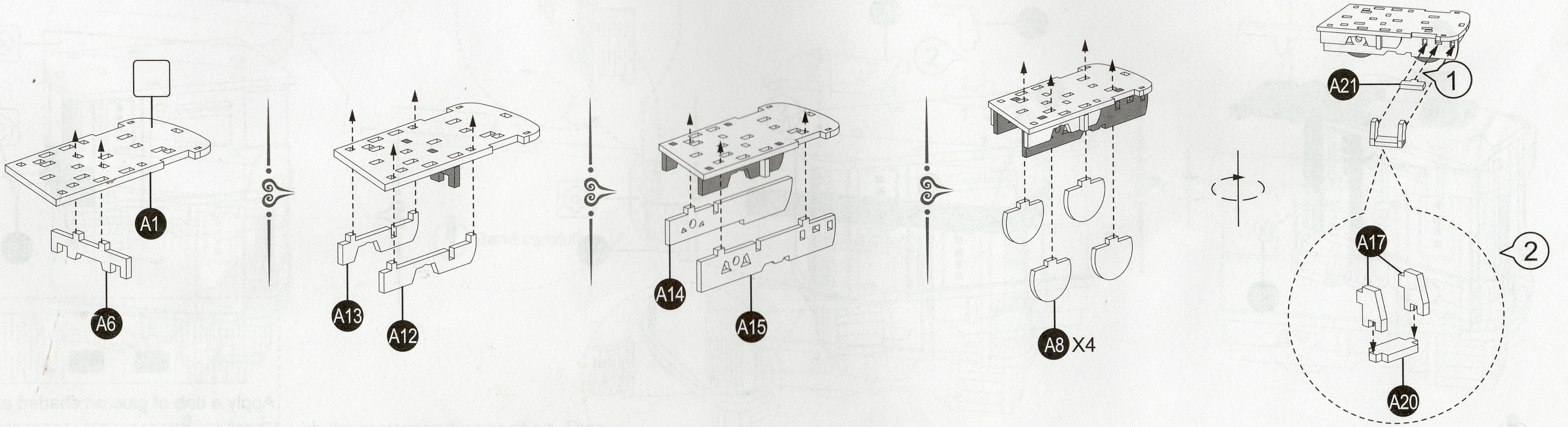
A1
A6
A13
A12
A14
A15
A8 X4
A21
1
A17
2
A20

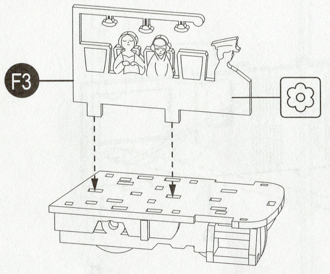

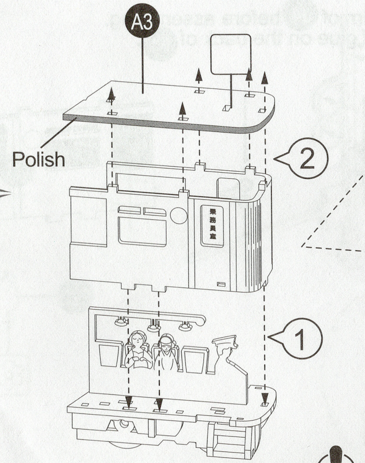
A3
Polish
2
1

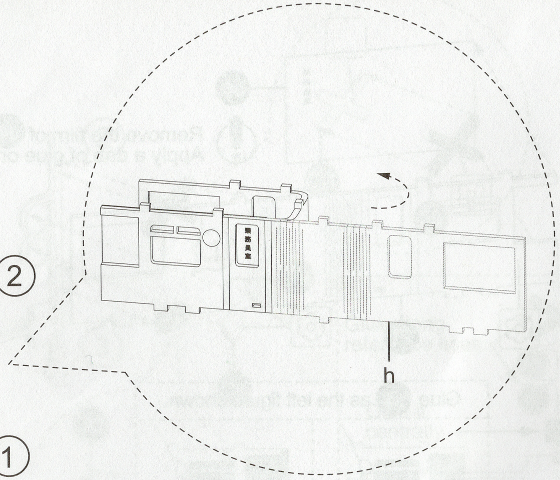

Polish shaded areas with the sandpaper.

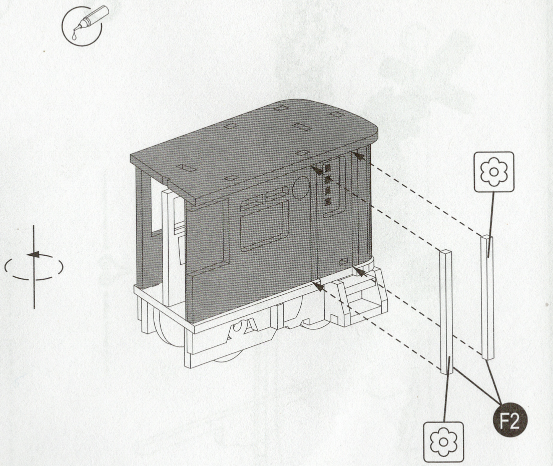

Glue along reference lines. F2 has spare parts.

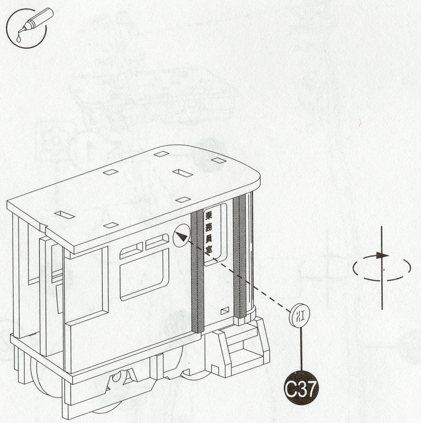

Glue along reference lines. C37 has spare parts.

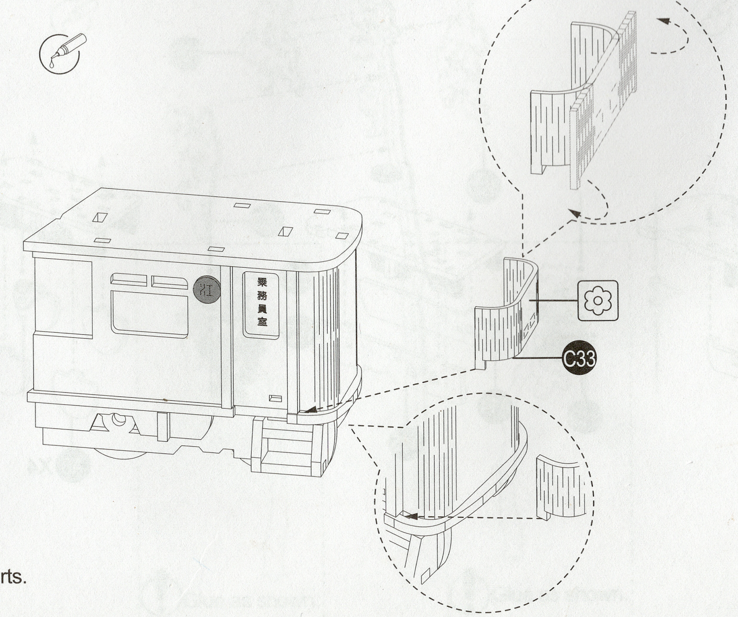

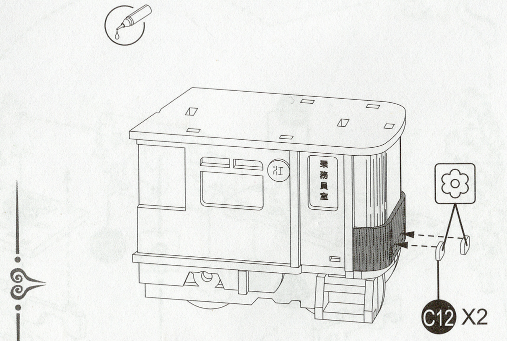

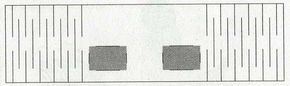

Apply a dab of glue on shaded areas.

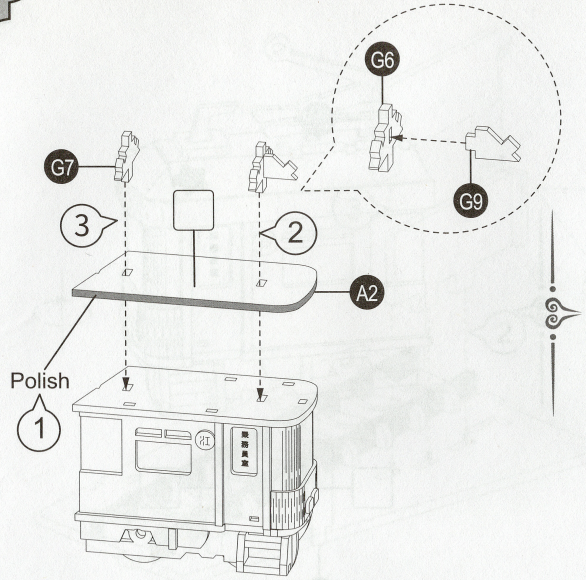
G6
G7
G9
3
2
A2
Polish
1
乗務員室

Sand shaded areas with the sandpaper.

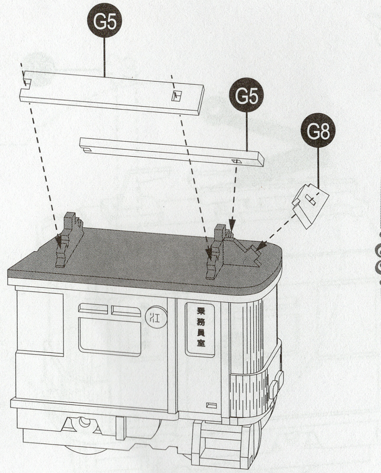
G5
G5
G8
乗務員室

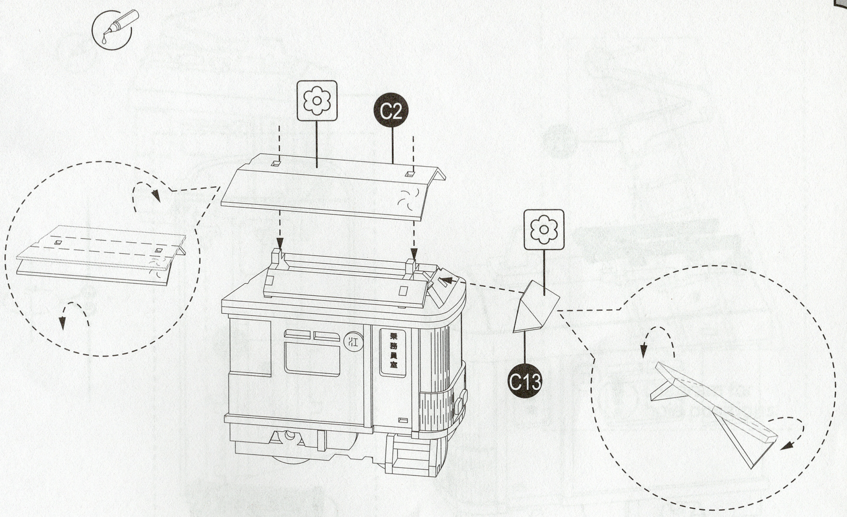

Bend carefully. Apply a dab of glue and press 10s.

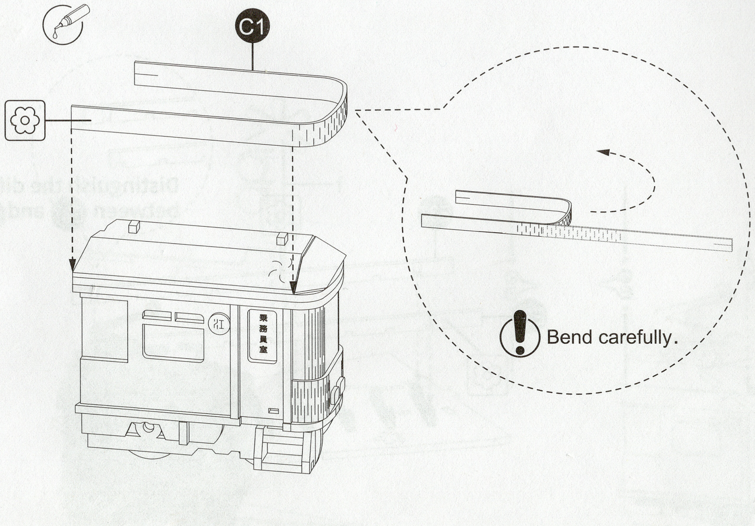

Bend carefully.

Align C1 with the corresponding position. Then apply a dab of glue and press 10s.

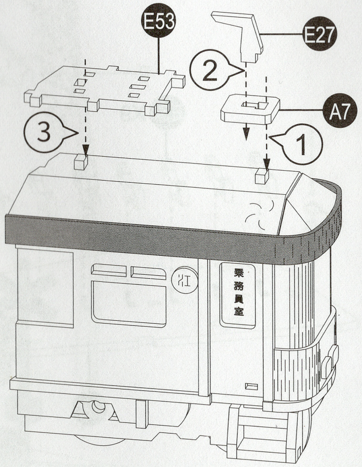
E53
E27
2
A7
3
1
乗務員室

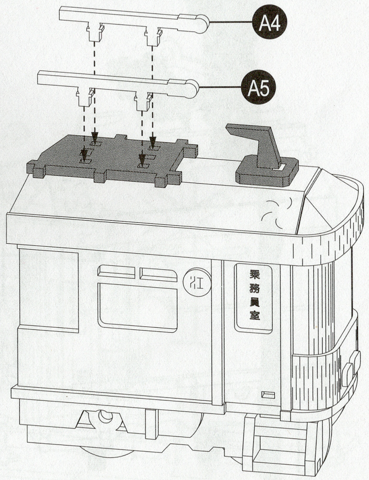

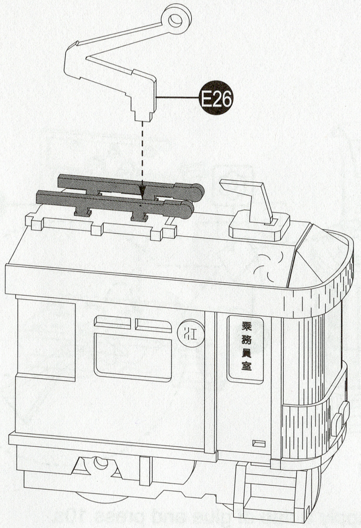

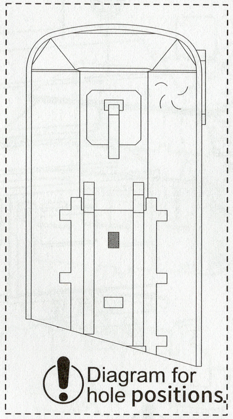
Diagram for hole positions.

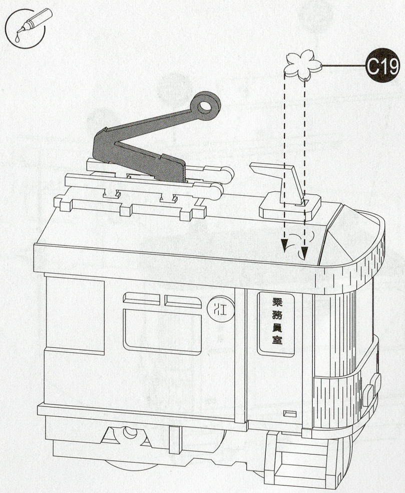

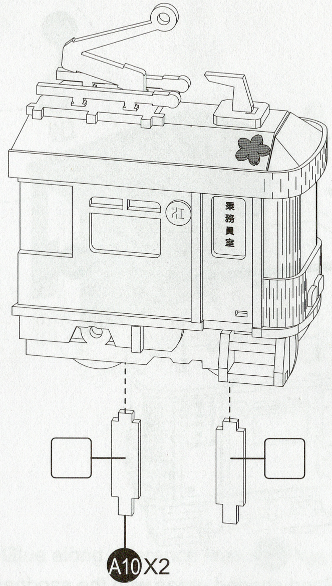

10

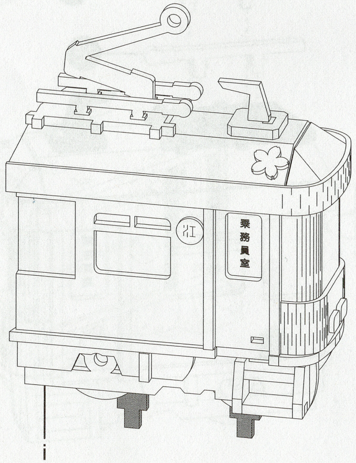

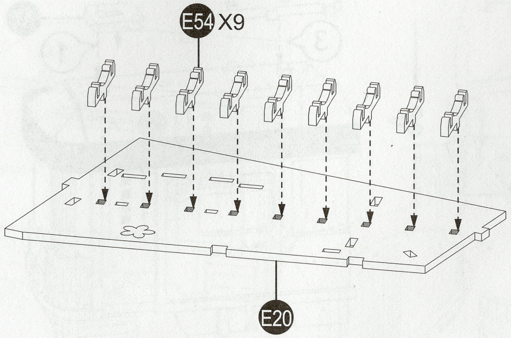

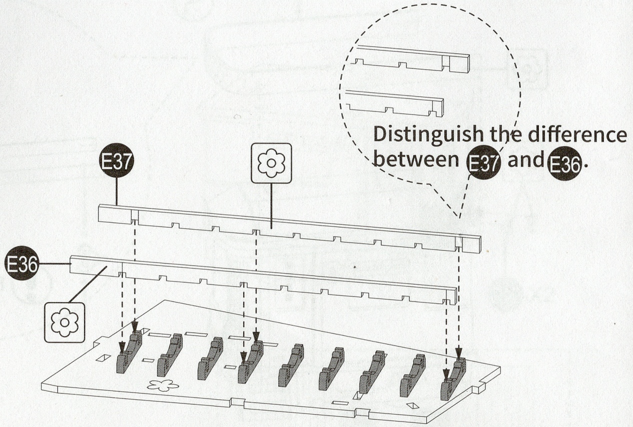

Distinguish the difference between E37 and E36.

Spare parts for E54.

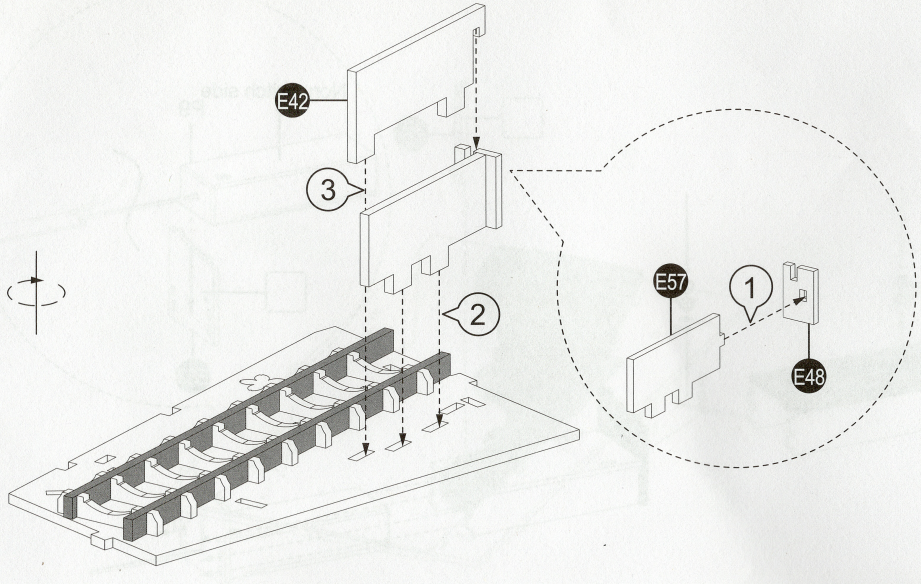
E42
3
2
E57
1
E48

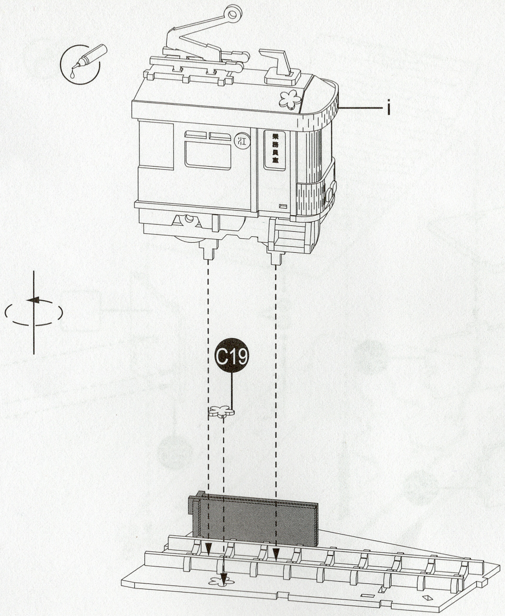

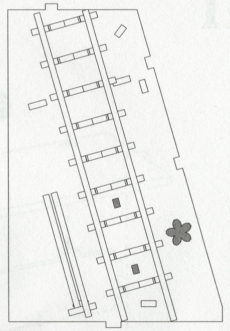

Diagram for hole positions.

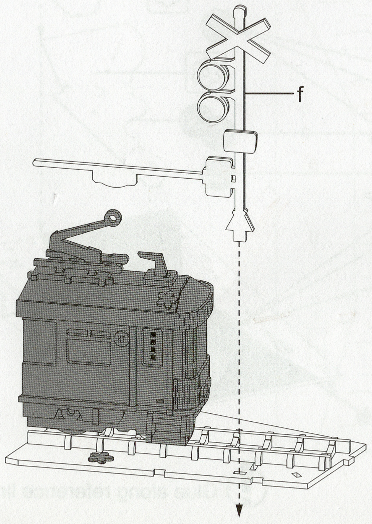

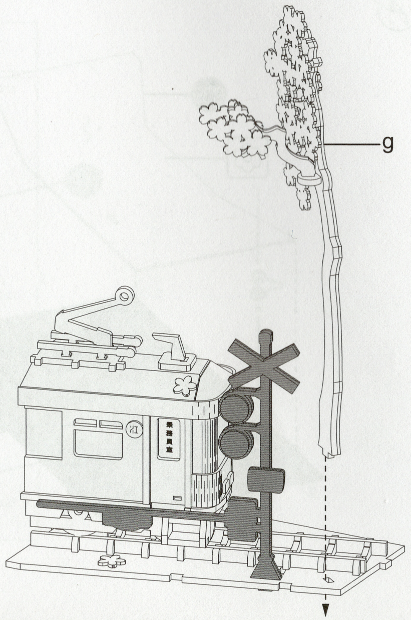

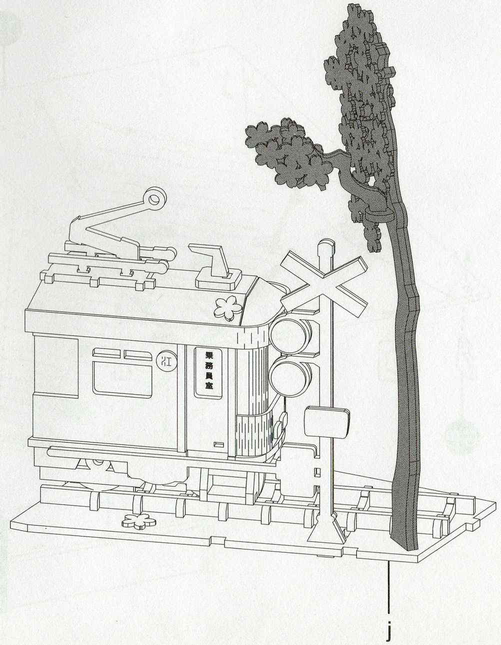

11

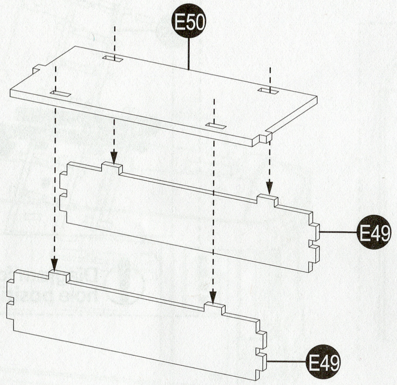

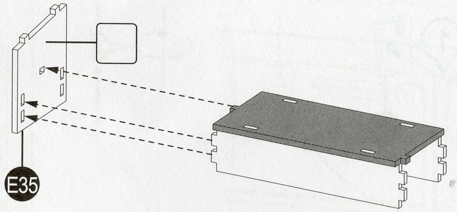

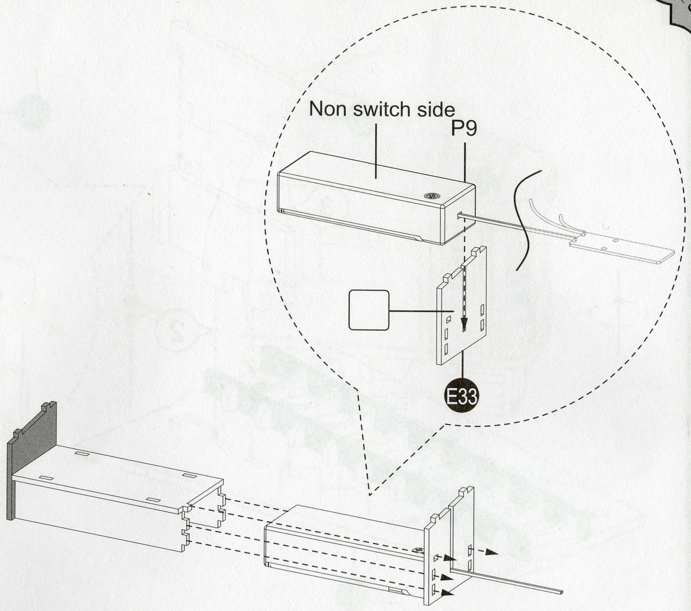
Non switch side
P9
E33

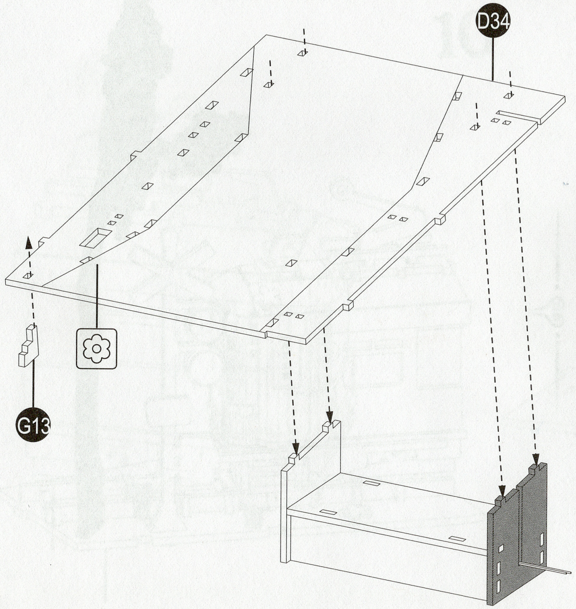

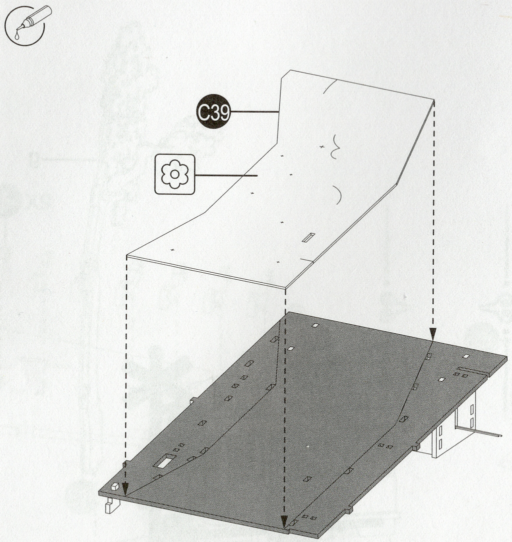

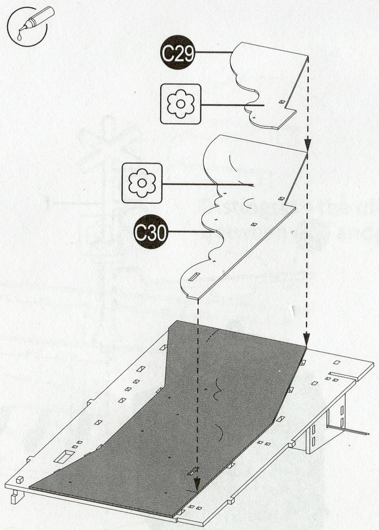

❗ Glue along reference lines.

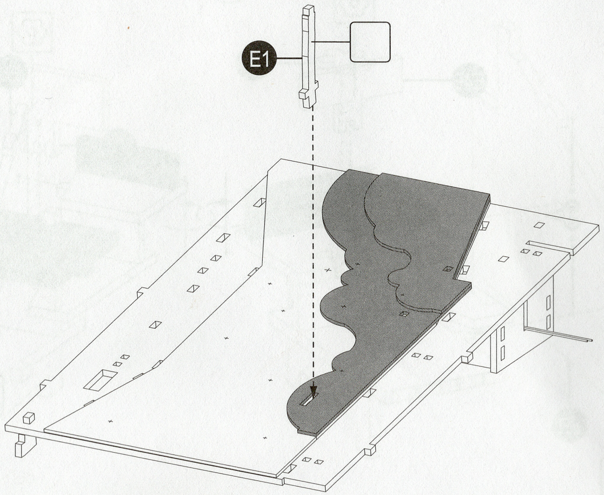

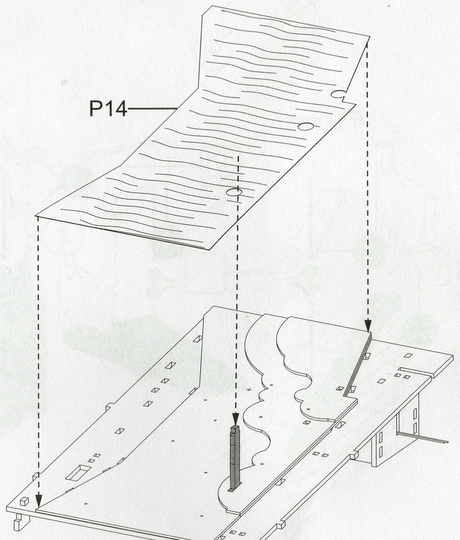

Apply some glue on the edge.

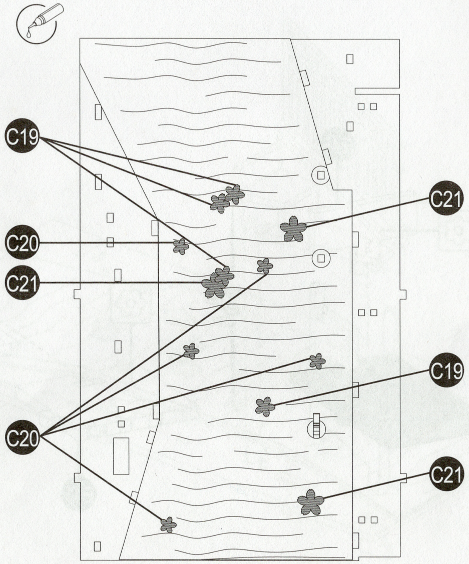
C19
C20
C21
C21
C19
C20
C21

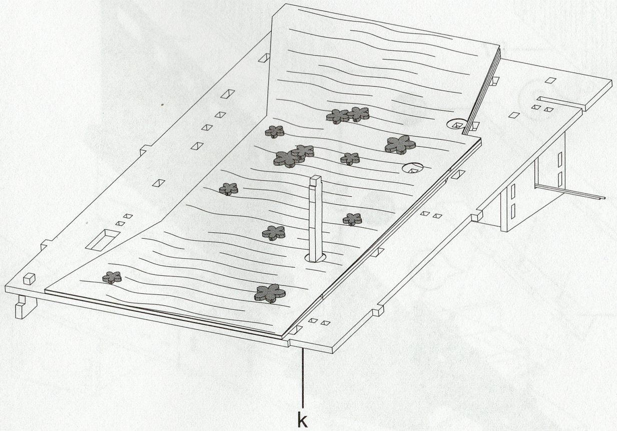

12

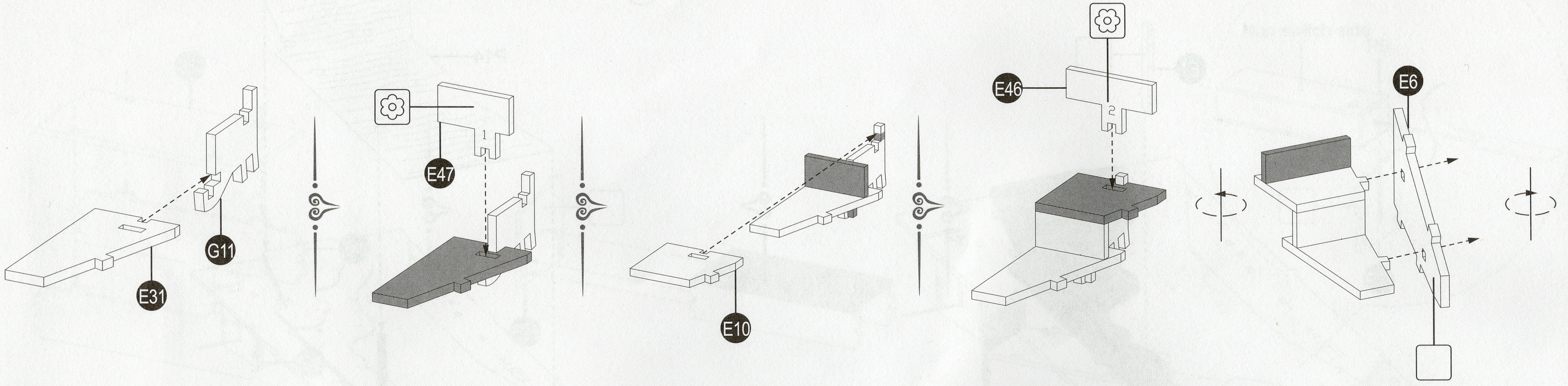
E31
G11
E47
1
E10
E46
2
E6

13

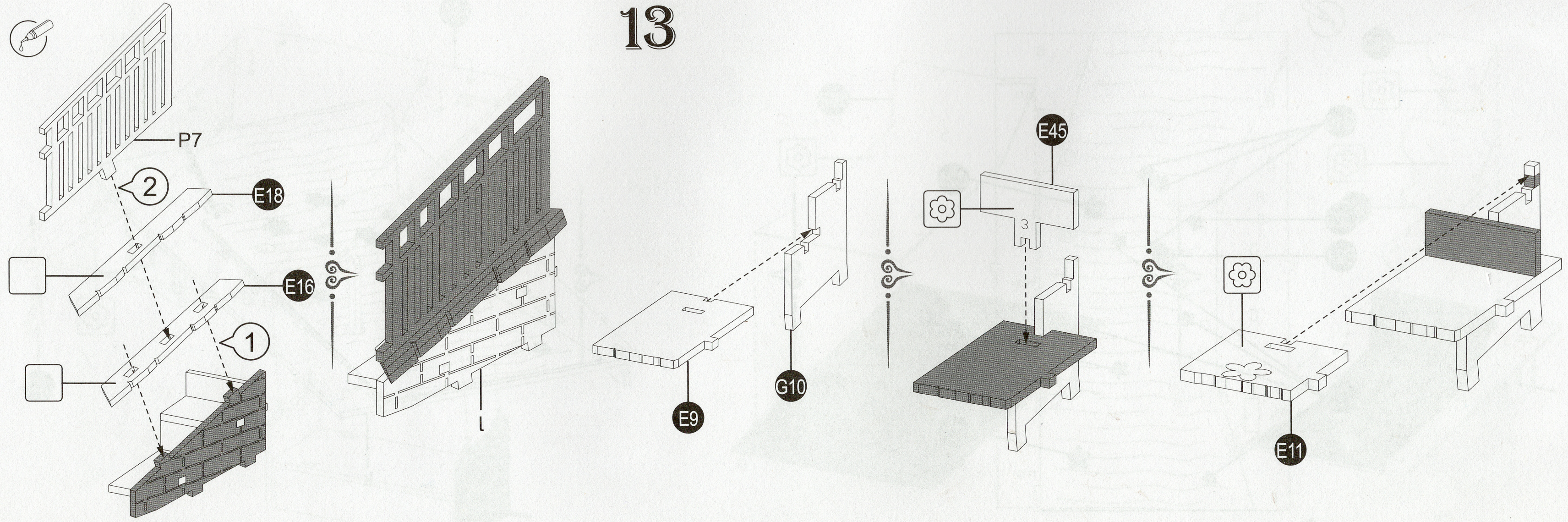
P7
②
E18
E16
①
E9
G10
E45
3
E11

Take out P7 in Bag No.2.

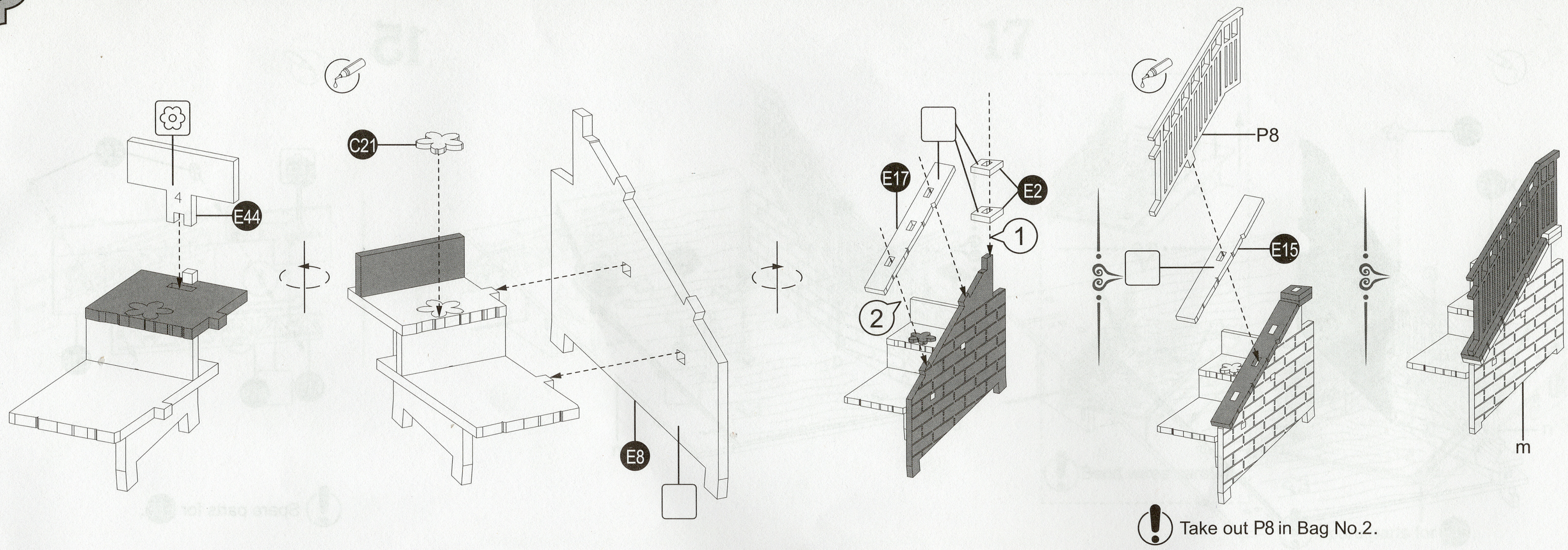
E44
4
C21
E8
E17
E2
1
2
P8
E15
m

Take out P8 in Bag No.2.

14

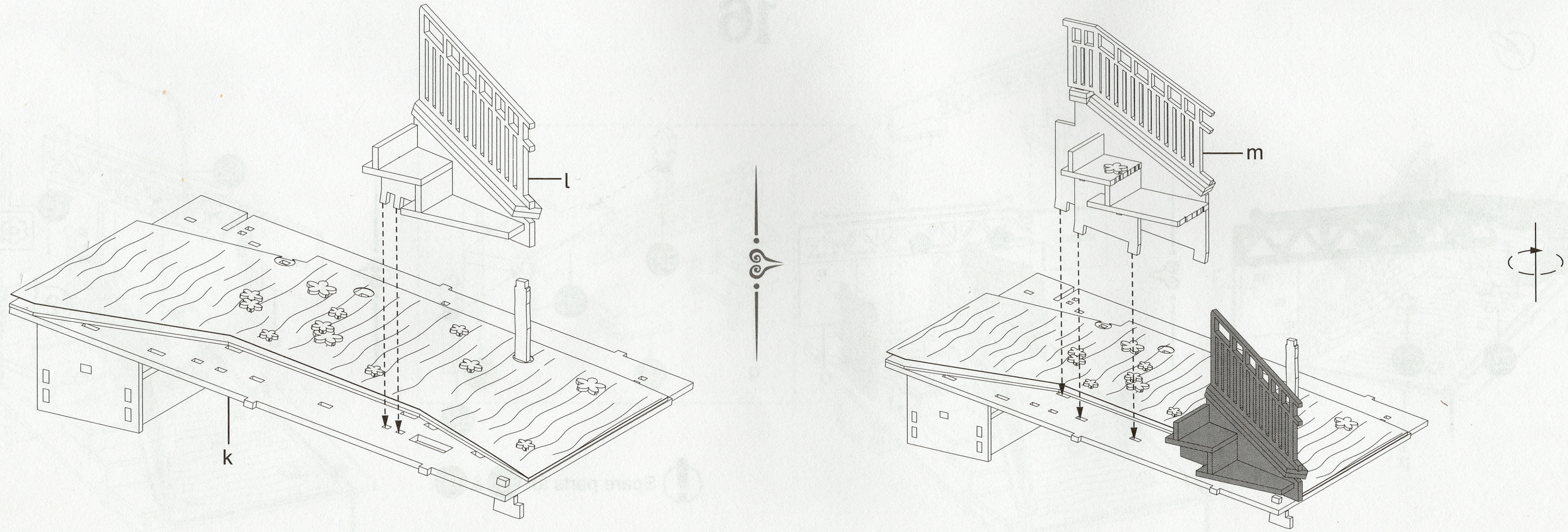

15

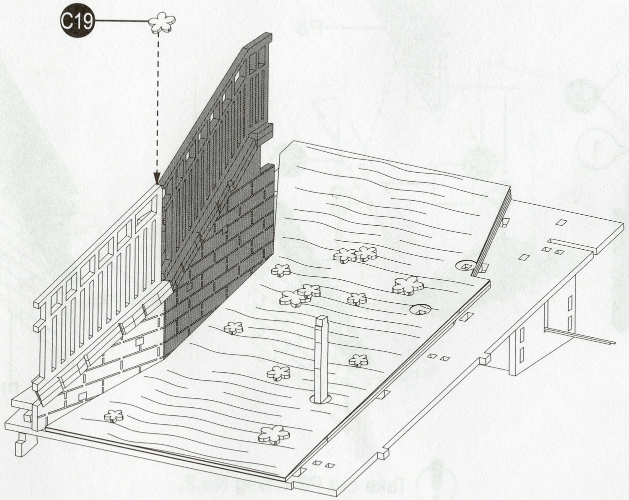

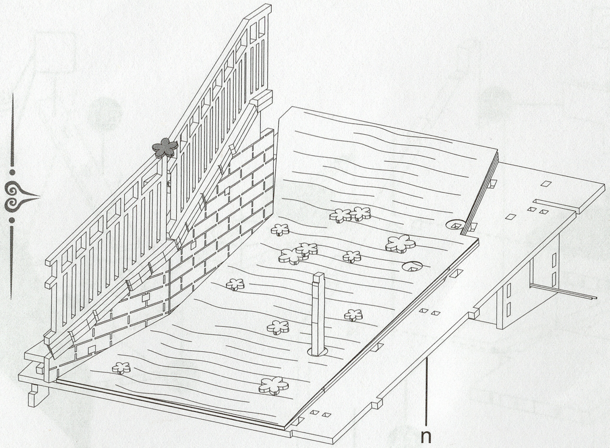

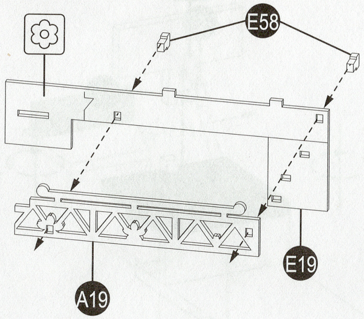

Spare parts for **E58**.

16

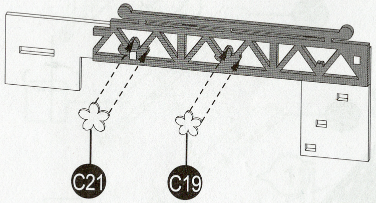

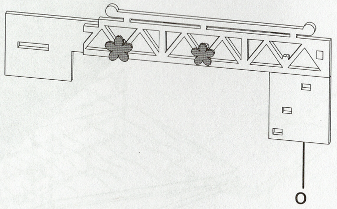

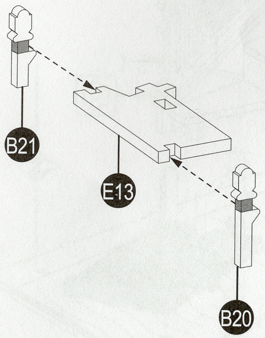

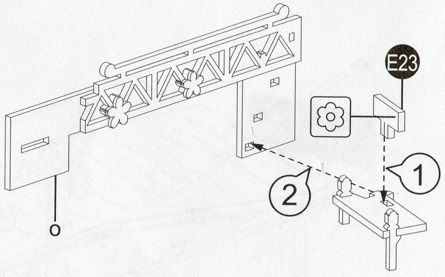

Spare parts for **B20** & **B21**.

17

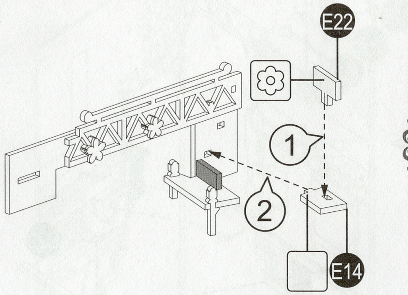

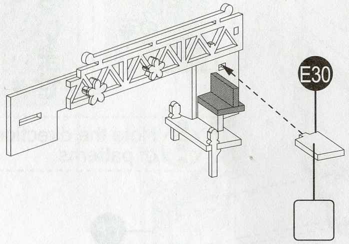

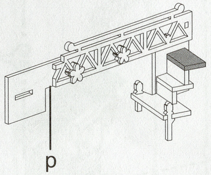

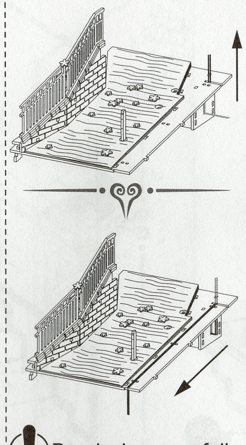

Bend wires carefully.

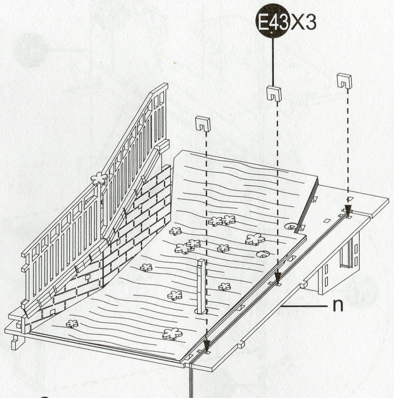

Spare parts for E43.

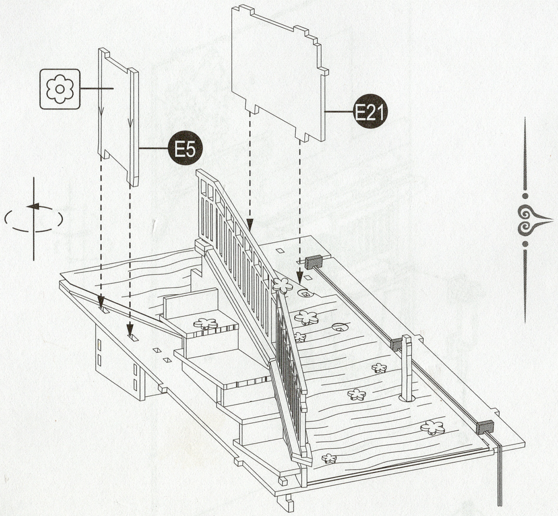

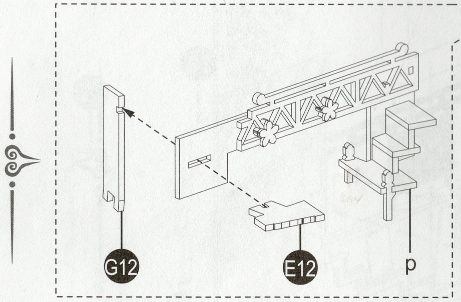

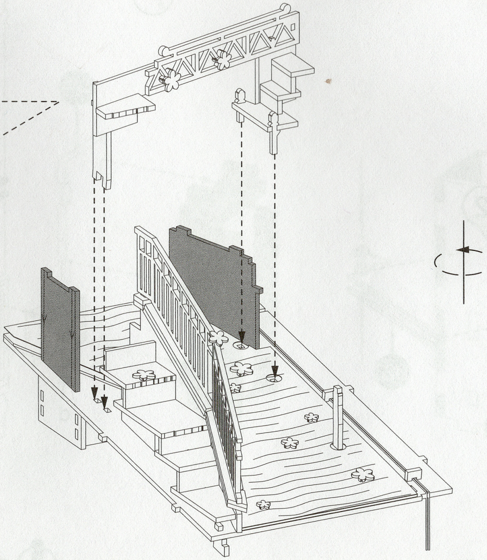

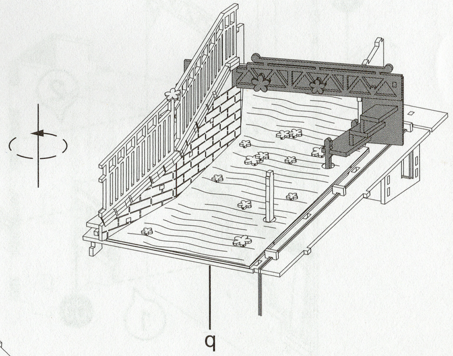

18

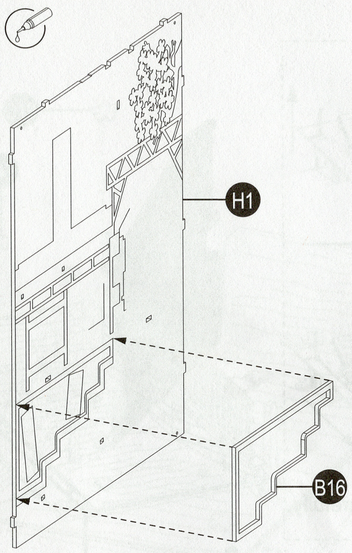

Glue along reference lines.

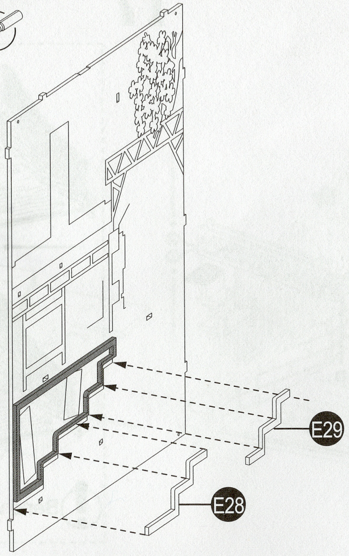

Glue along reference lines.

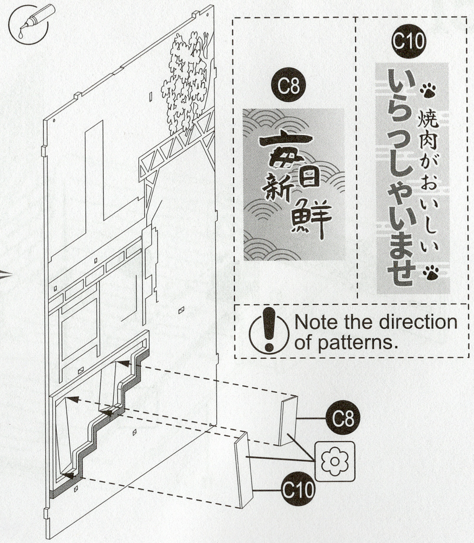
C10
C8
毎日新鮮
焼肉がおいしい
いらっしゃいませ
C8
C10

Note the direction of patterns.

Glue along reference lines.

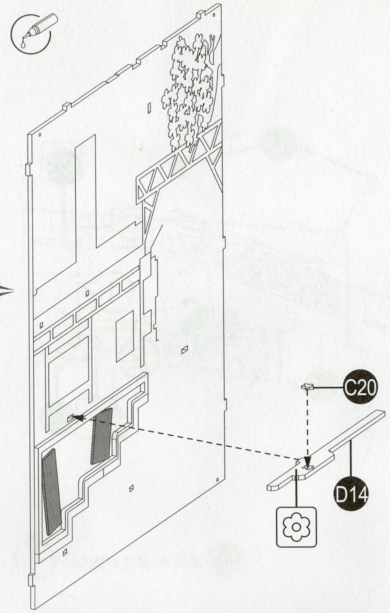

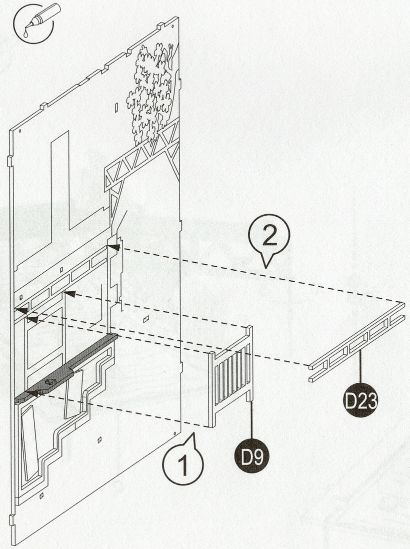

Glue along reference lines.

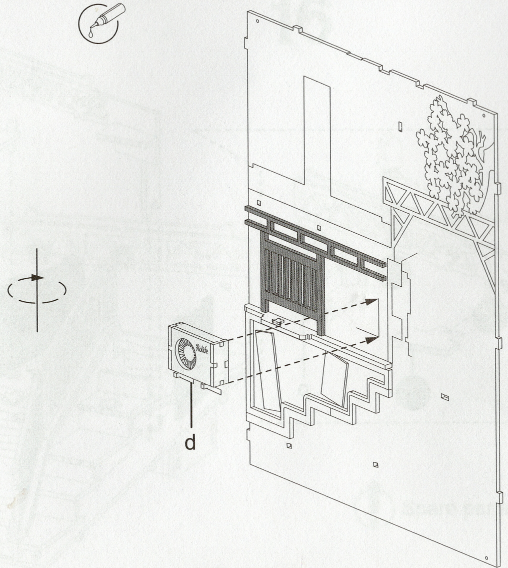

Glue along reference lines.

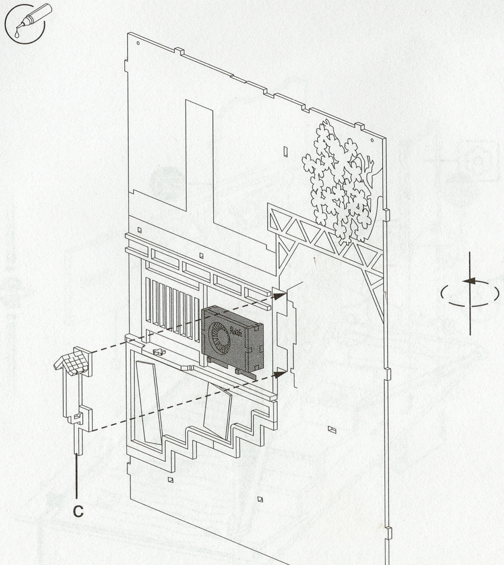

Glue along reference lines.

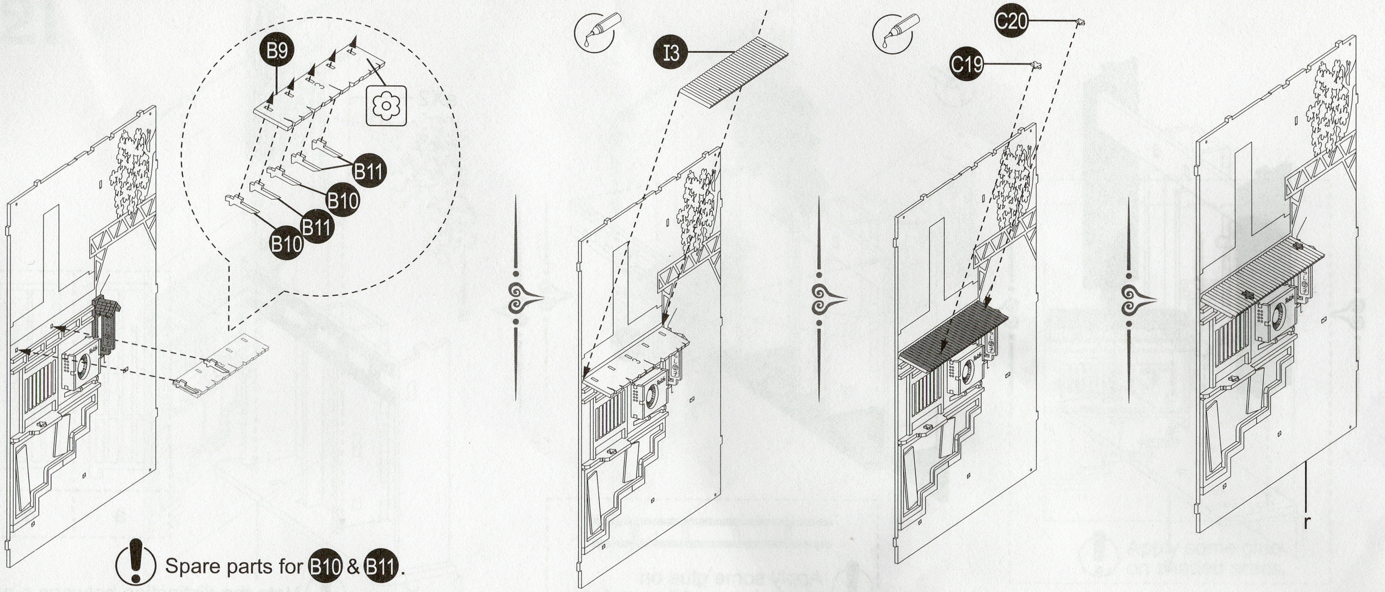
B9
B11
B10
B11
B10
I3
C20
C19
r

Spare parts for B10 & B11.

19

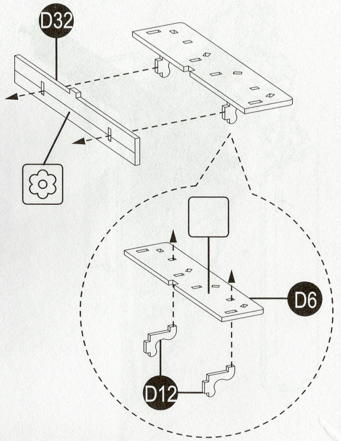

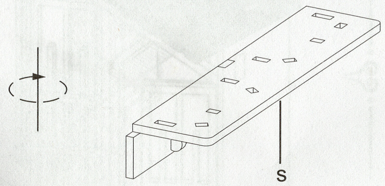

20

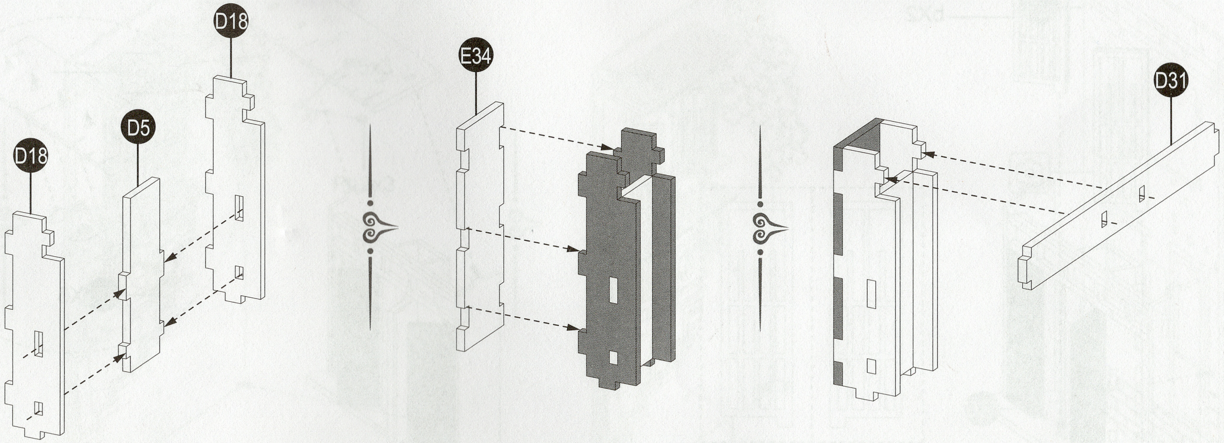
D18
D5
D18
E34
D31

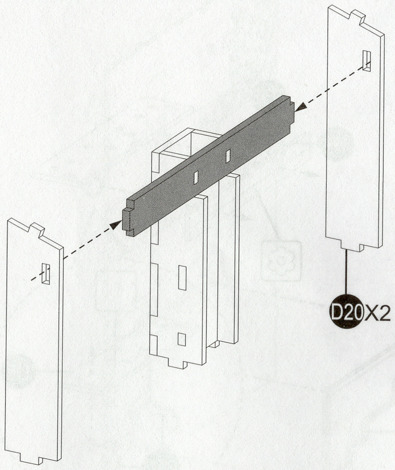

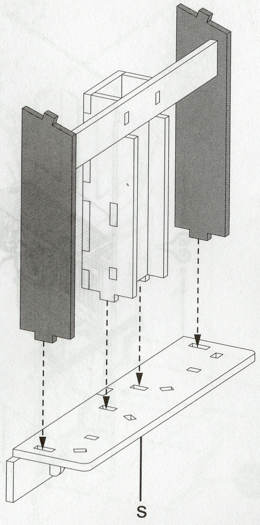

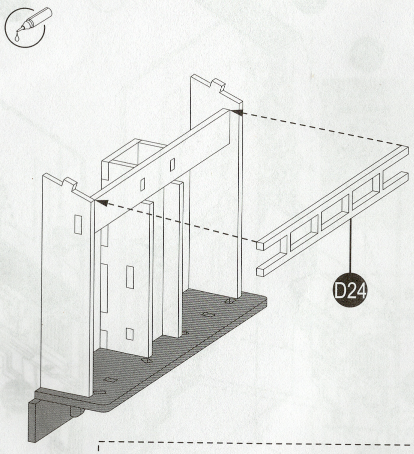

Apply some glue on shaded areas.Align and glue.

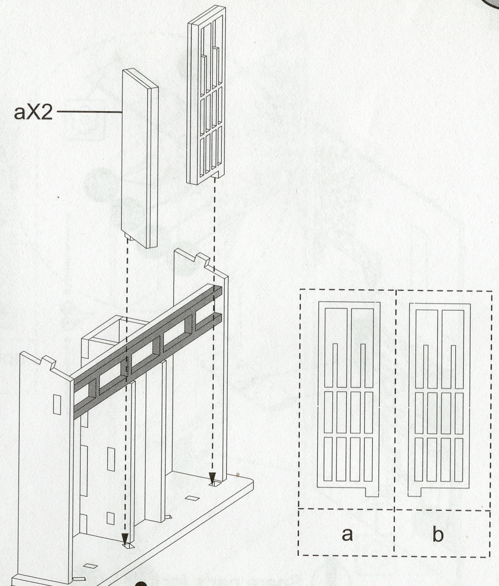

Note the distinction between a and b

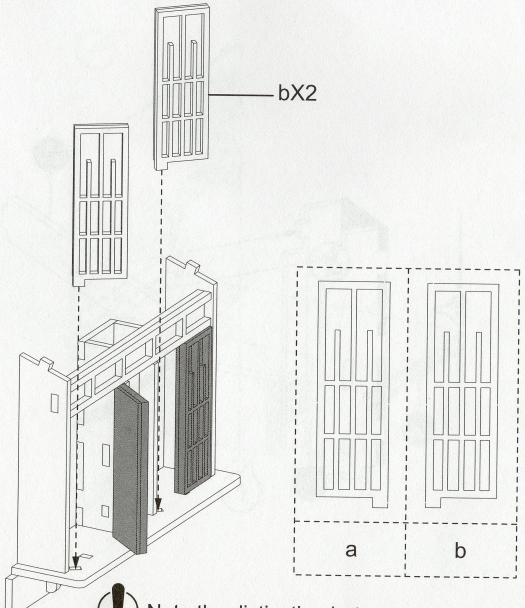

Note the distinction between a and b.

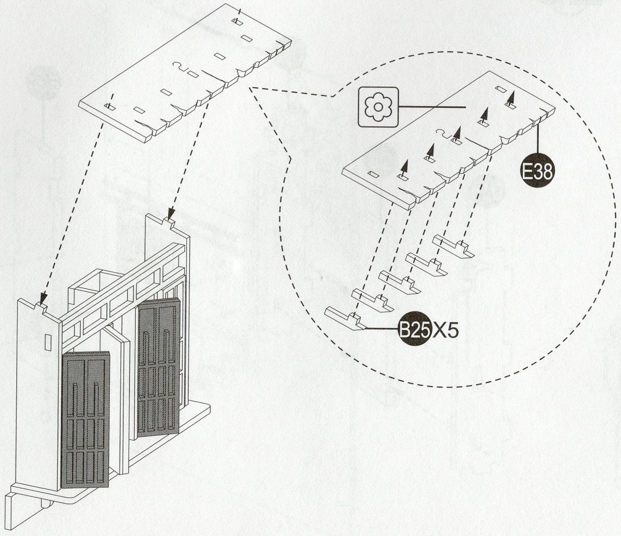

Spare parts for B25.

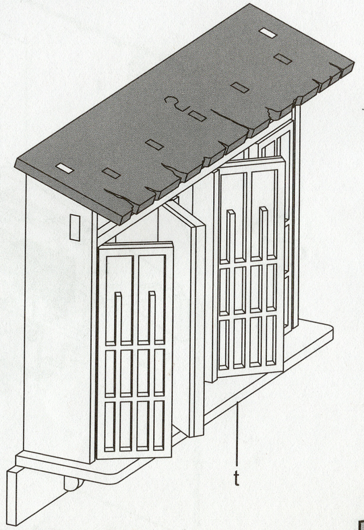

21

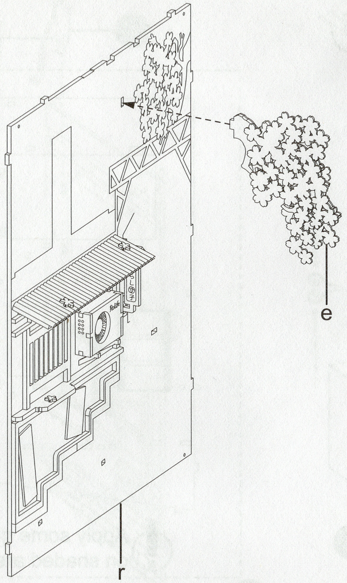

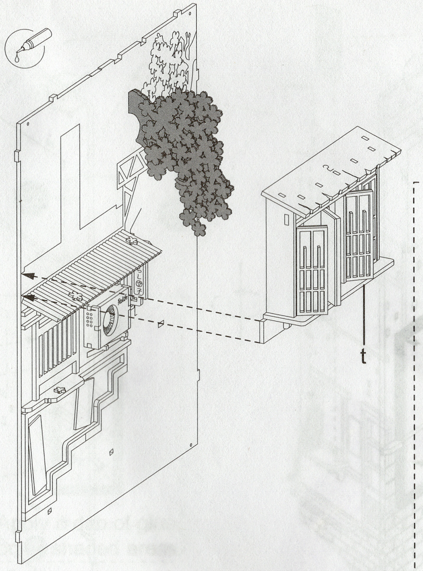

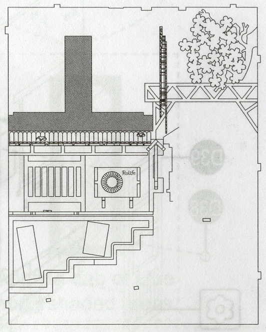

Apply some glue on shaded areas.

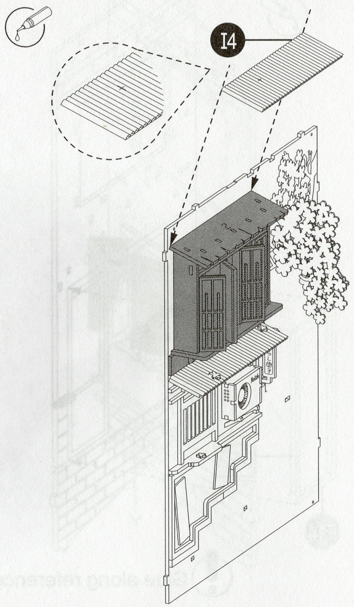

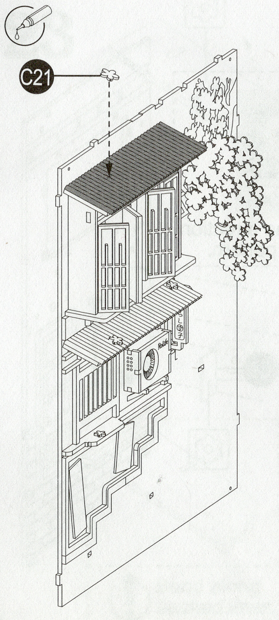

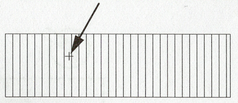

Glue on the marker.

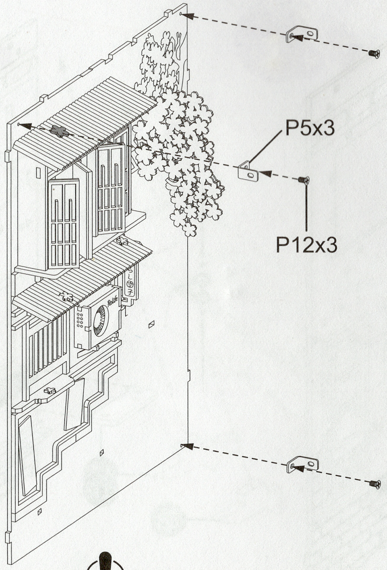

Don't screw it too tightly.

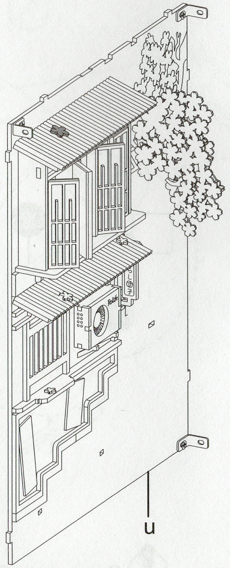

22

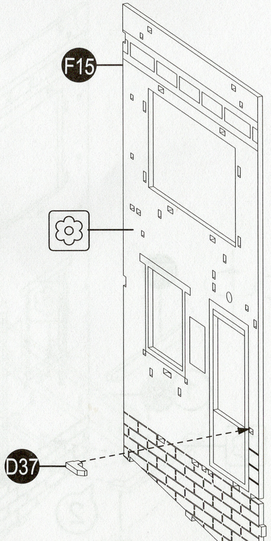

Spare parts for D37.

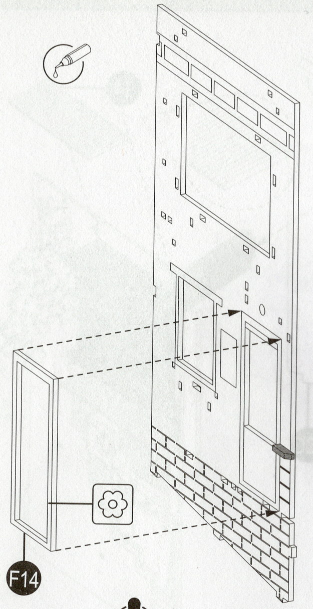

Glue along reference lines.

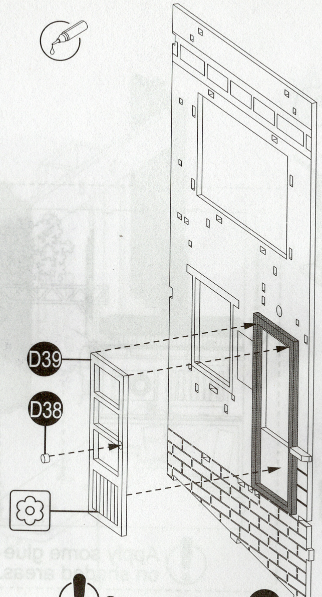

Spare parts for D38.

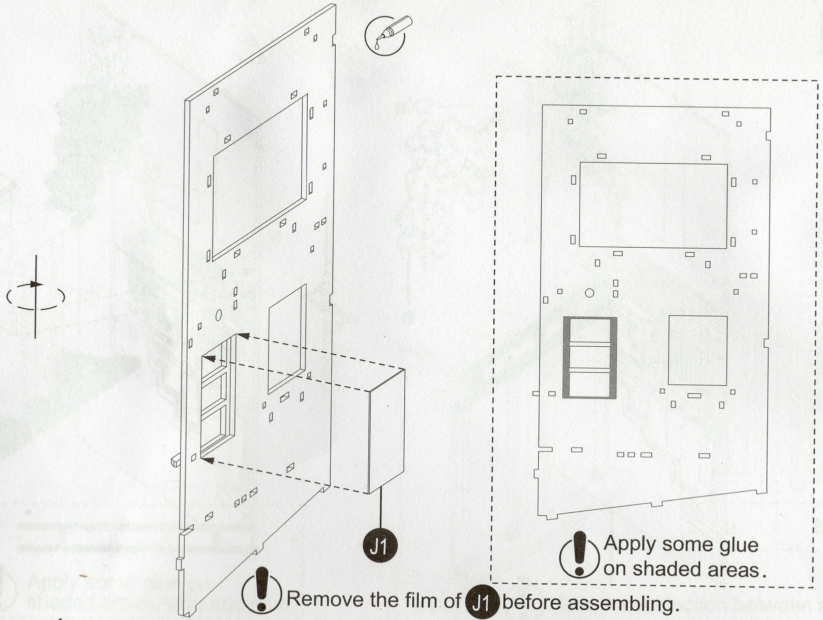

Remove the film of J1 before assembling.

Apply some glue on shaded areas.

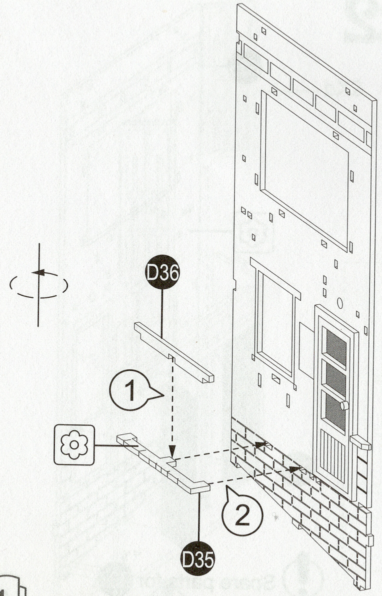

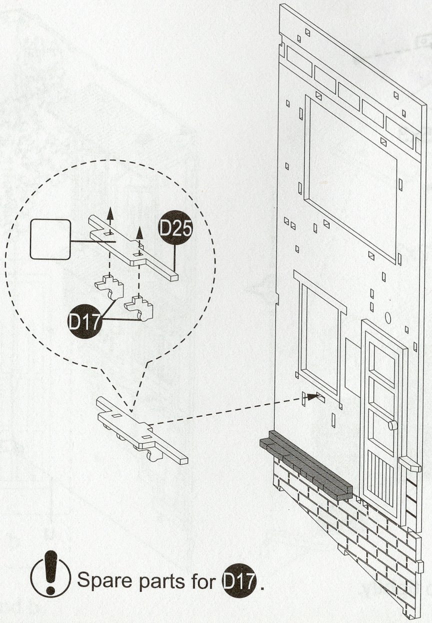

Spare parts for D17.

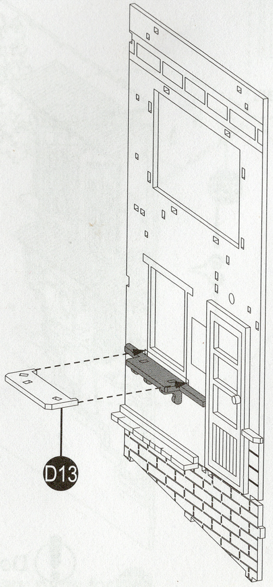

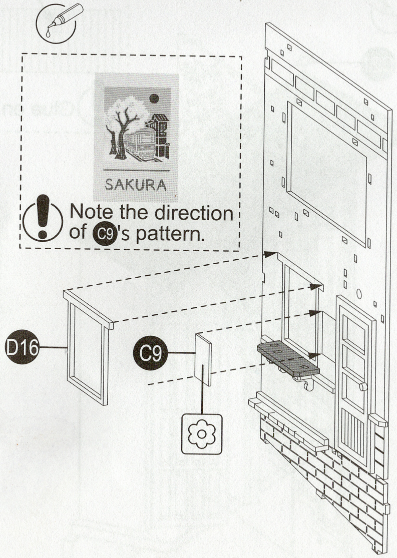
SAKURA
D16
C9

Note the direction of C9's pattern.

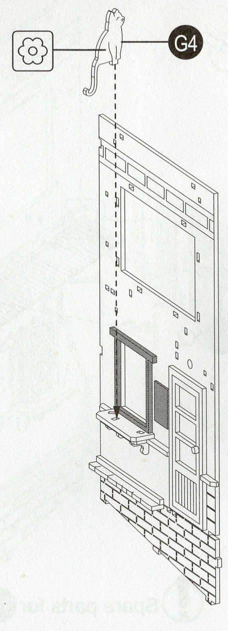

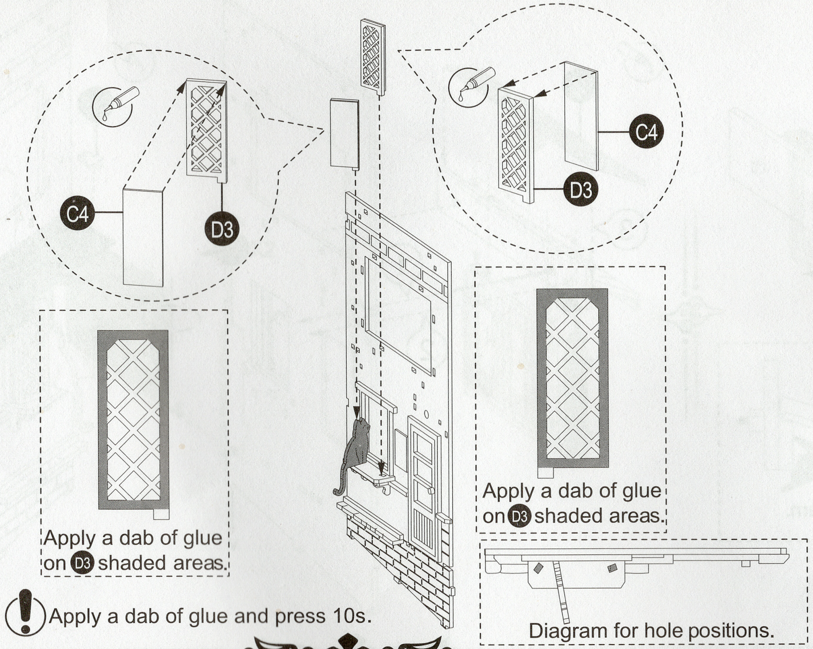

Apply a dab of glue on D3 shaded areas.

Apply a dab of glue on D3 shaded areas.

Apply a dab of glue and press 10s.

Diagram for hole positions.

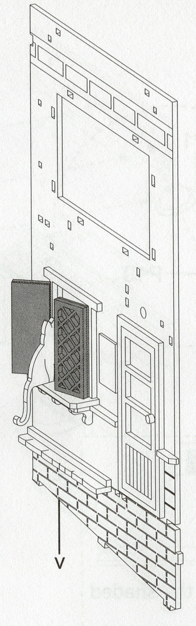

23

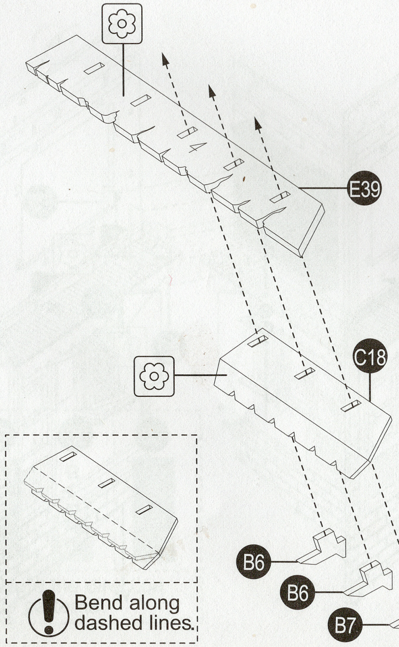
E39
C18
B6
B6
B7

Bend along dashed lines.

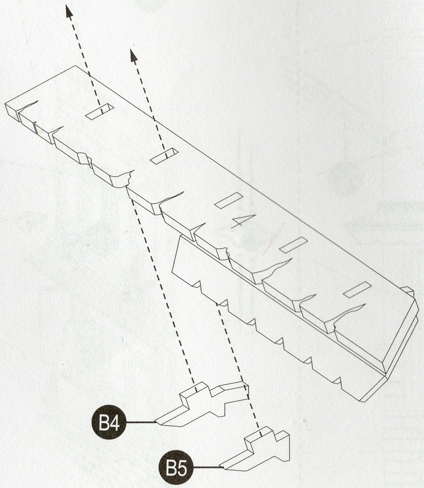

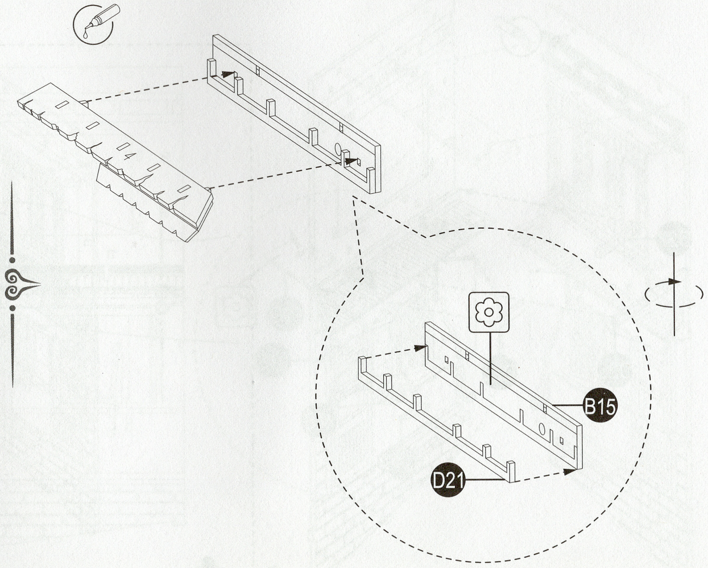

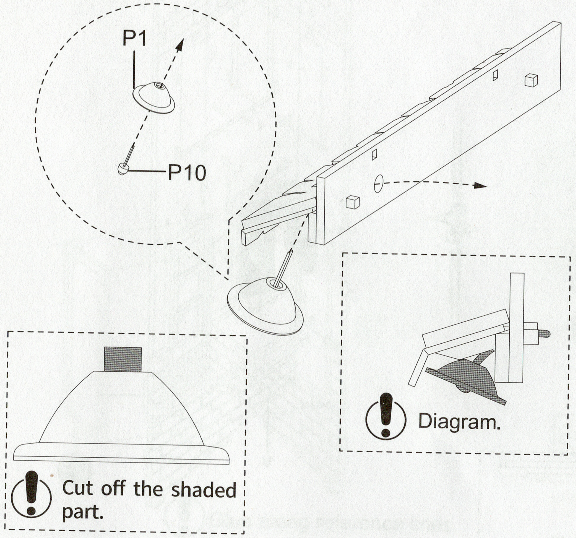

Cut off the shaded part.

Diagram.

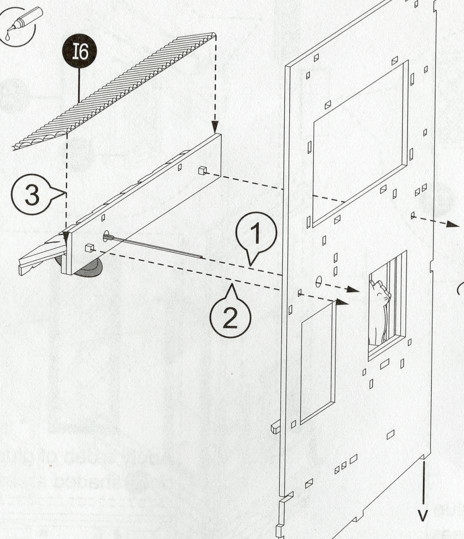

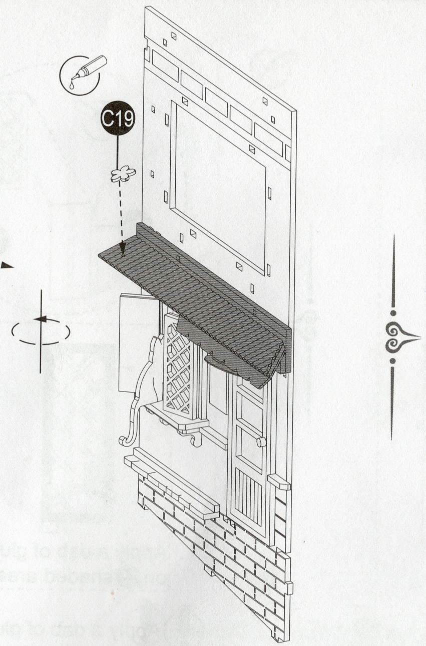

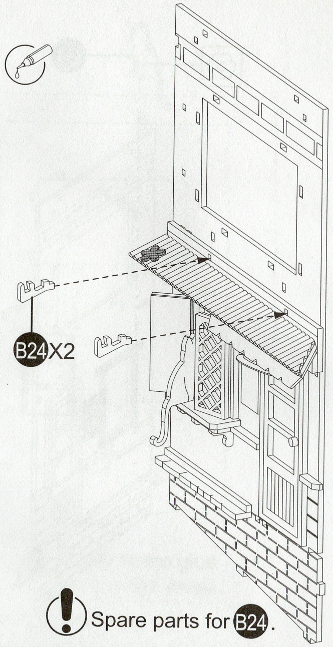

Spare parts for B24.

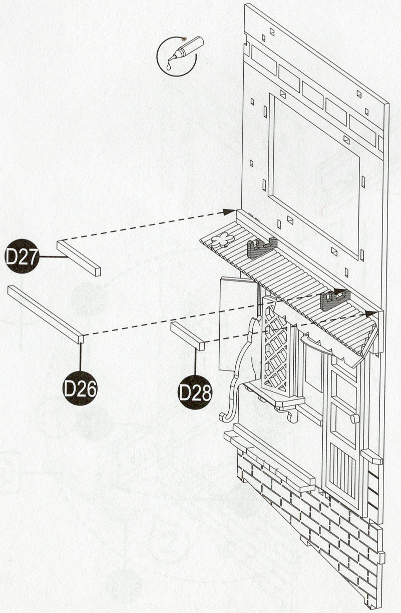

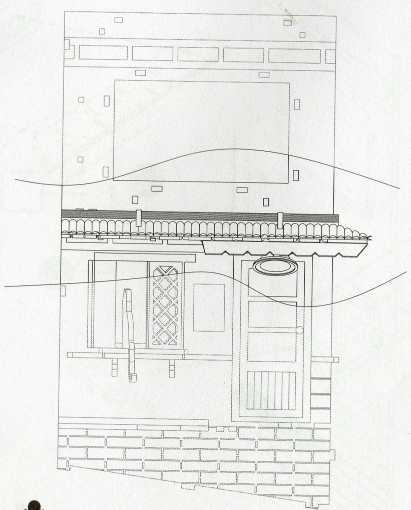

Apply a dab of glue on shaded areas.

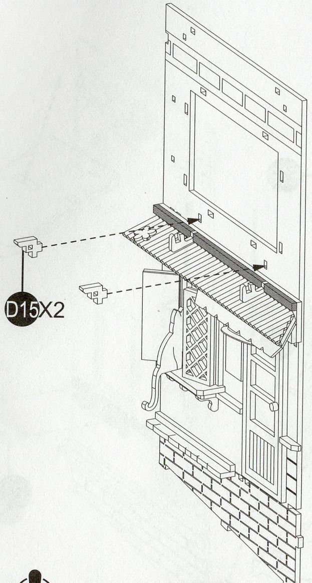

Spare parts for D15.

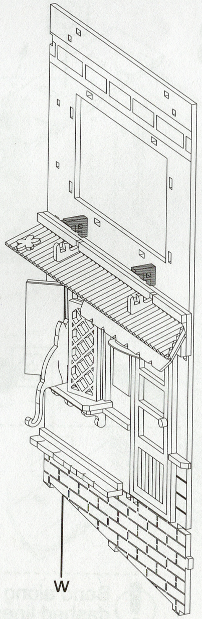

24

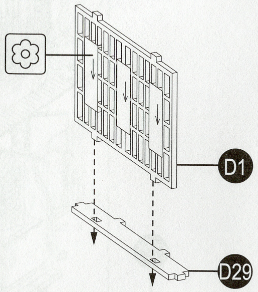

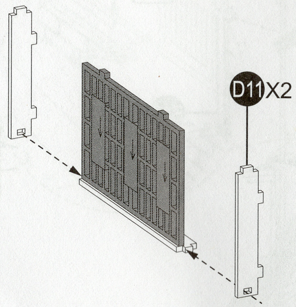

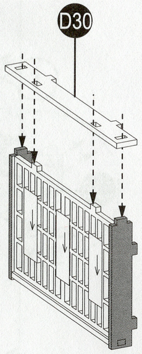

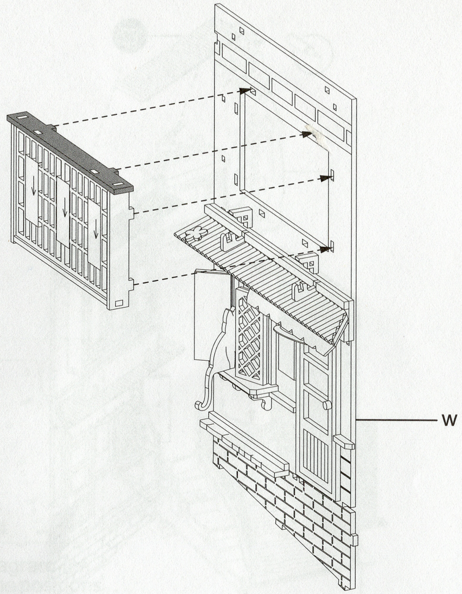

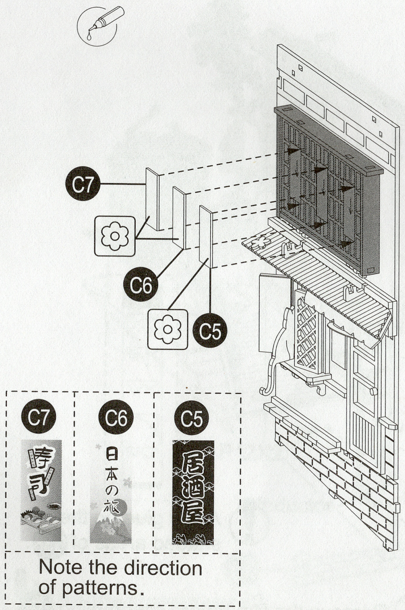
C7
C6
C5
C7
C6
C5

Note the direction of patterns.

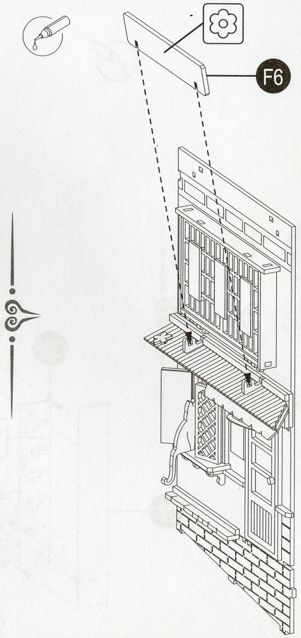

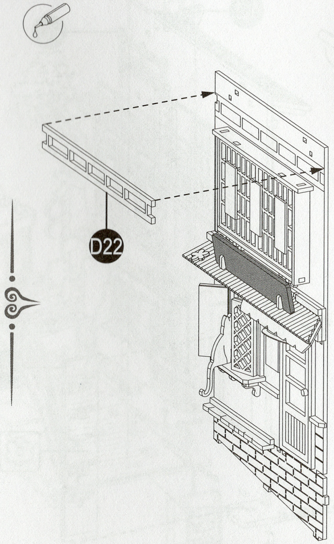

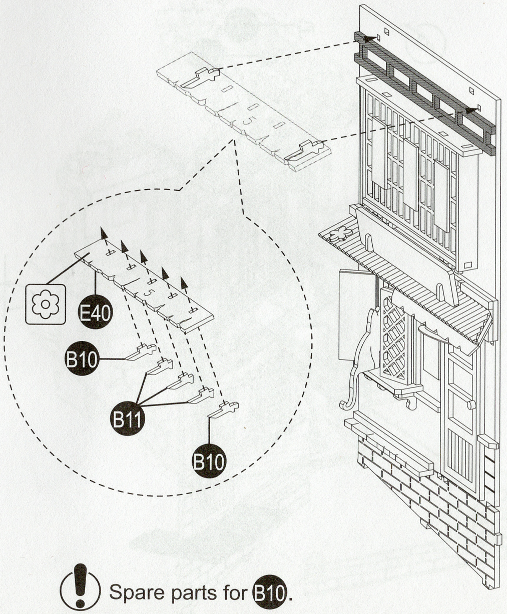
E40
B10
B11
B10

Glue along reference lines.

Spare parts for B10.

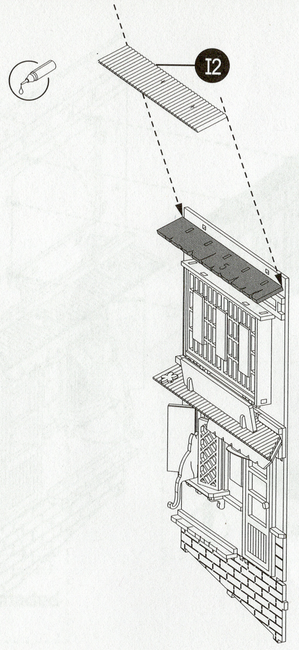

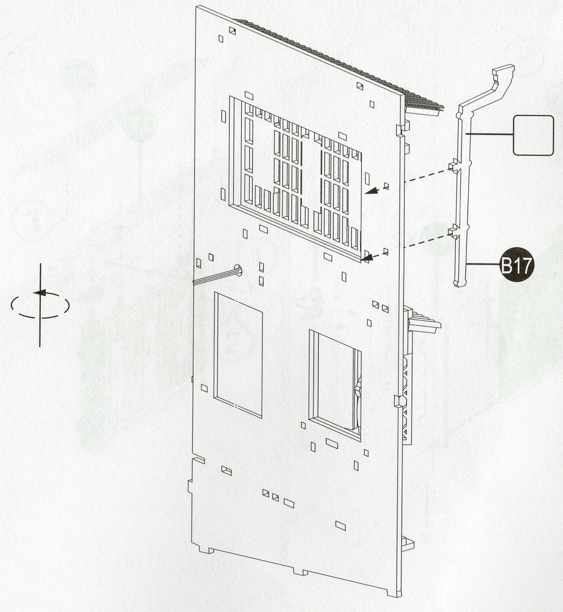

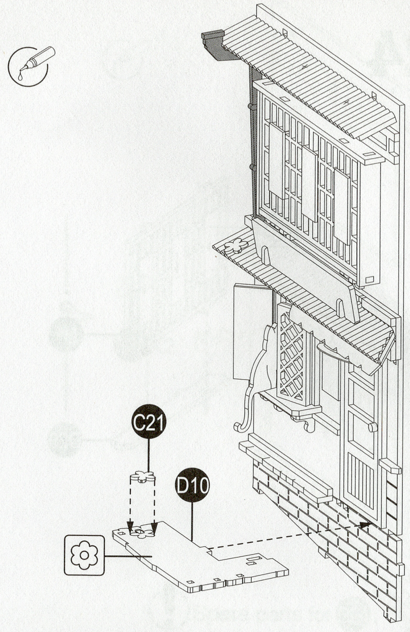

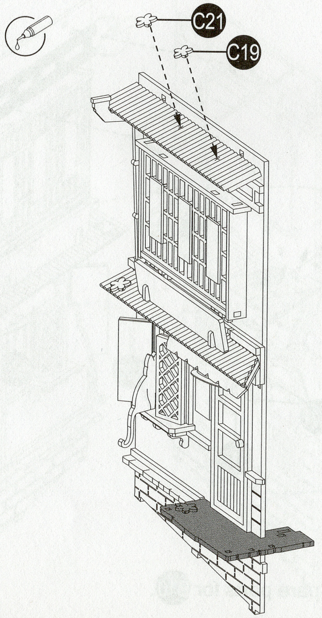

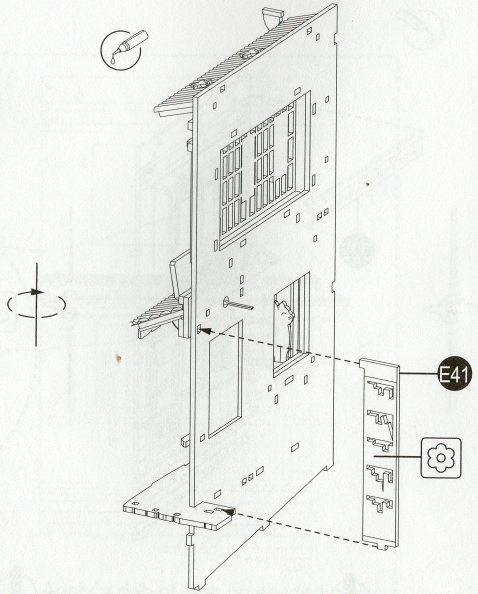

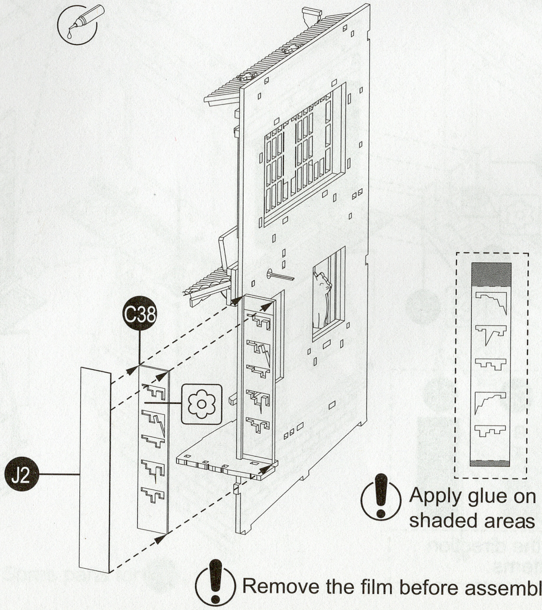

Apply glue on the shaded areas of C38.

Remove the film before assembling J2.

25

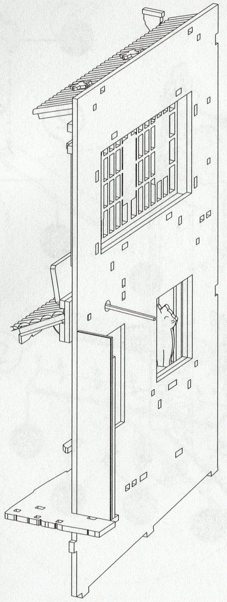

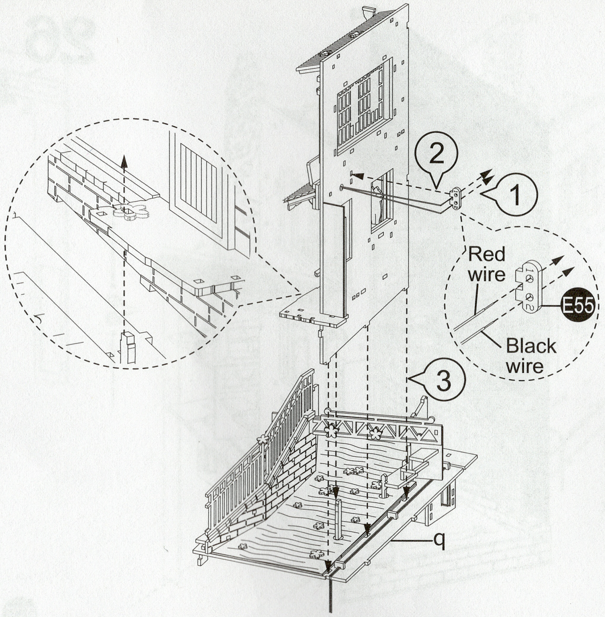
2
1
Red wire
E55
Black wire
3
q

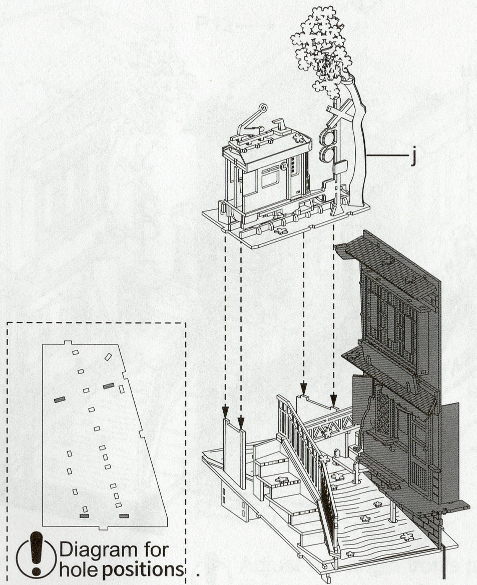

Diagram for hole positions

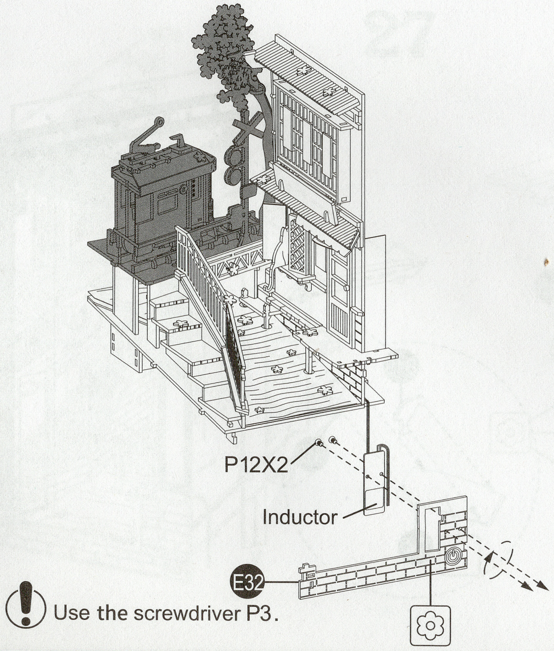
P12X2
Inductor
E32

Use the screwdriver P3.

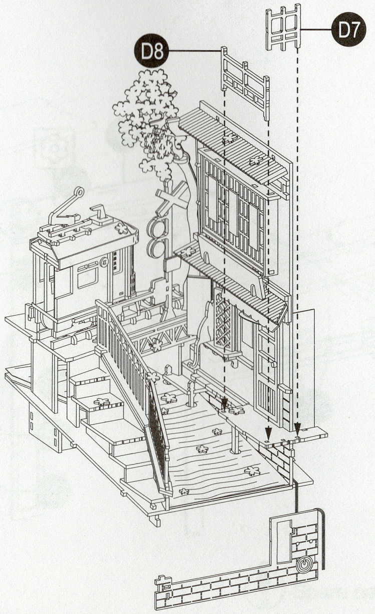

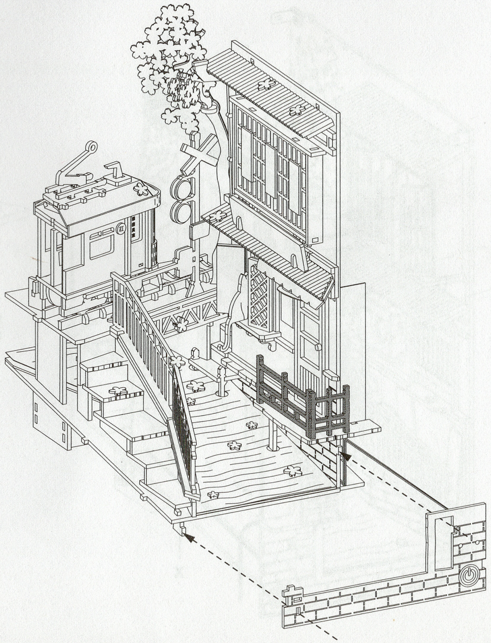

26

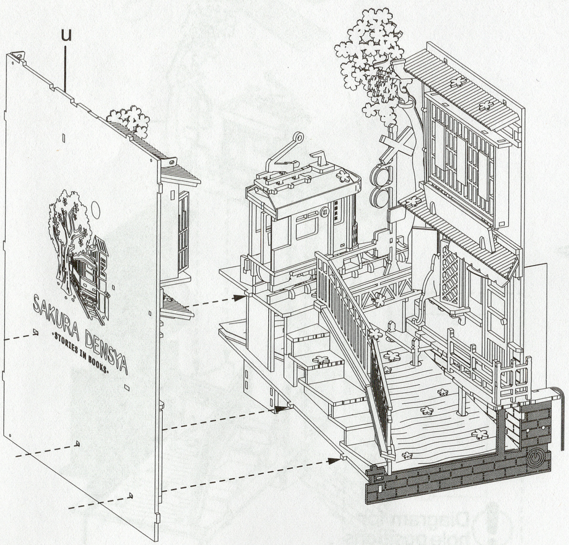
u
SAKURA DENSYA
-STORIES IN BOOKS-

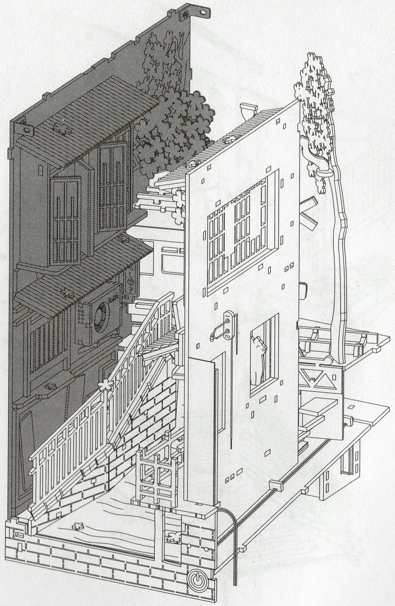

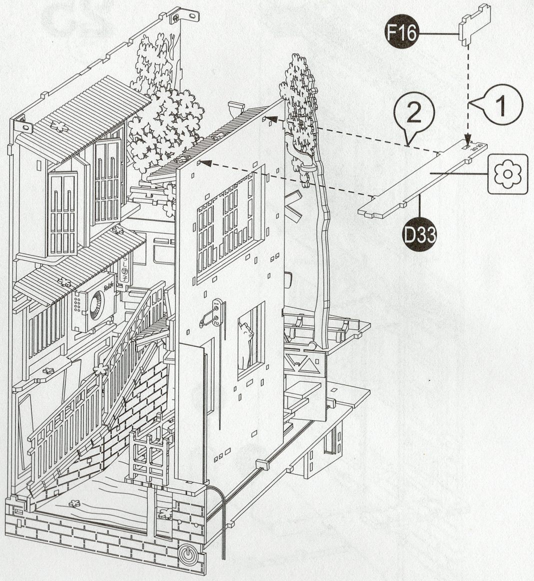

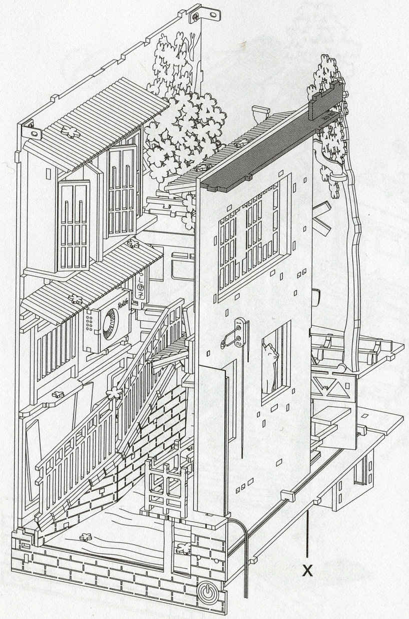

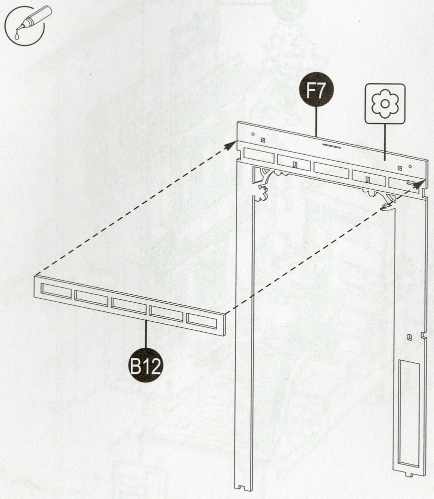

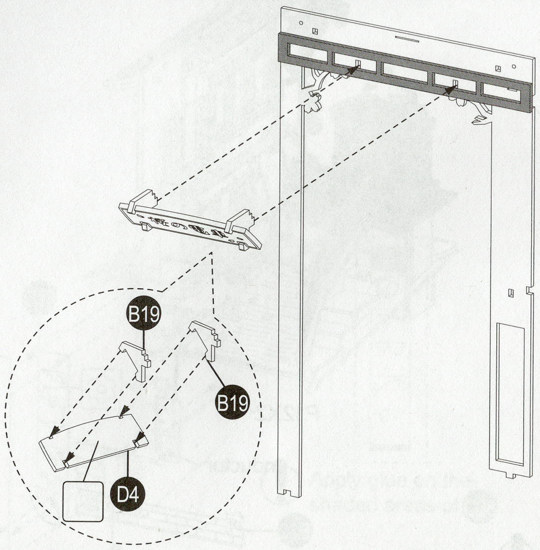

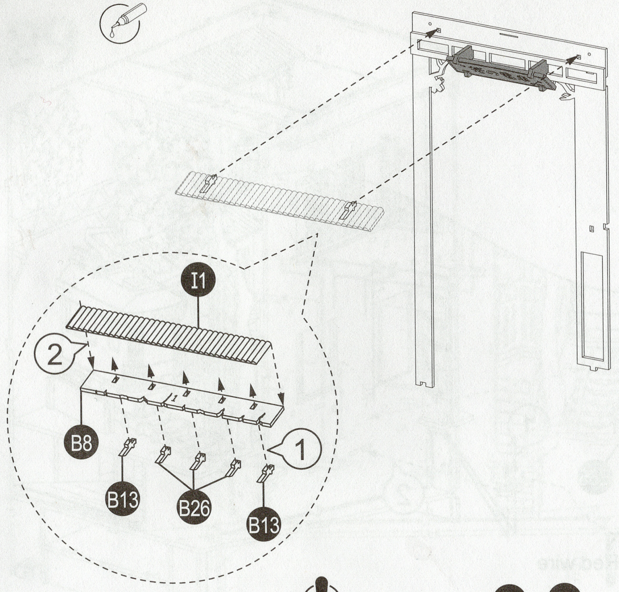
I1
2
B8
1
B13
B26
B13

Spare parts for B13 & B26.

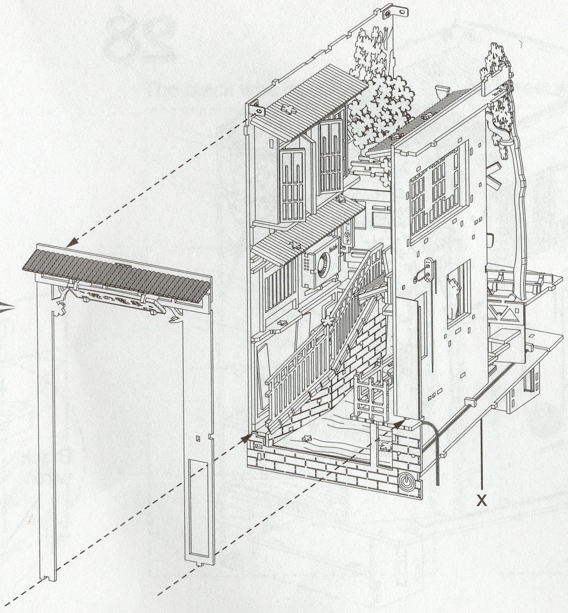

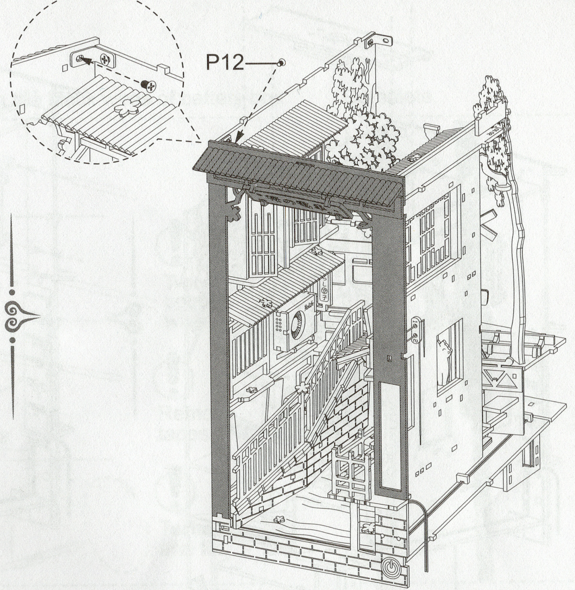

Adjust the angle iron's position and tighten screws on both sides.

27

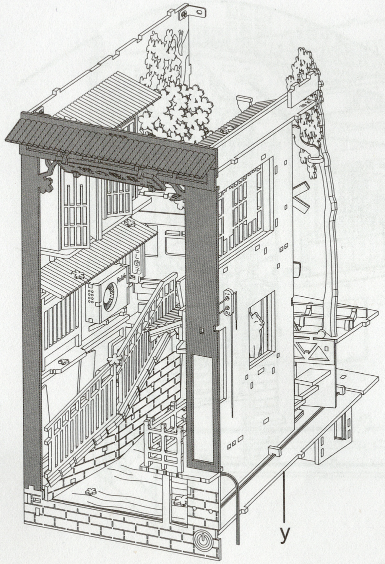

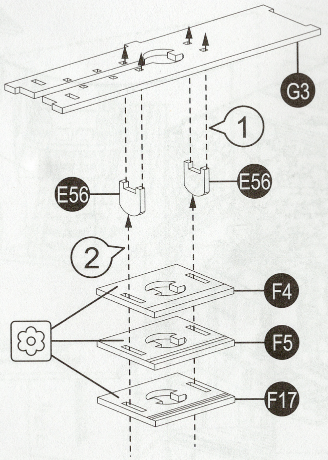
G3
1
E56
E56
2
F4
F5
F17

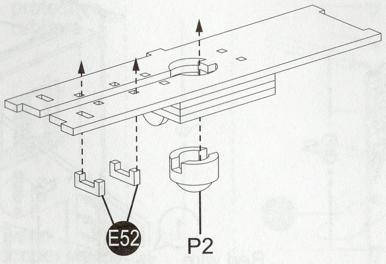

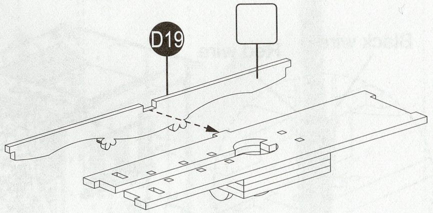

Spare parts for E52.

28

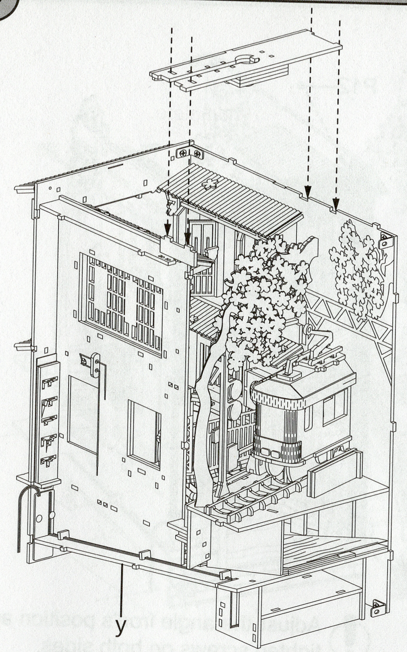

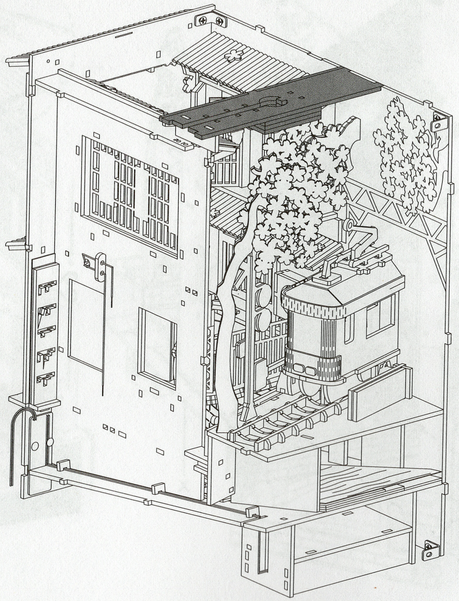

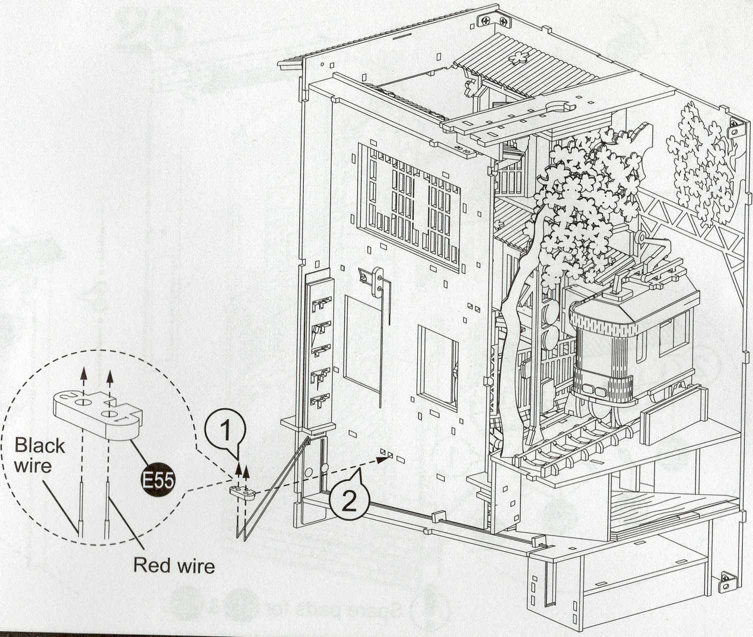
Black wire
Red wire
E55
①
②

* * *

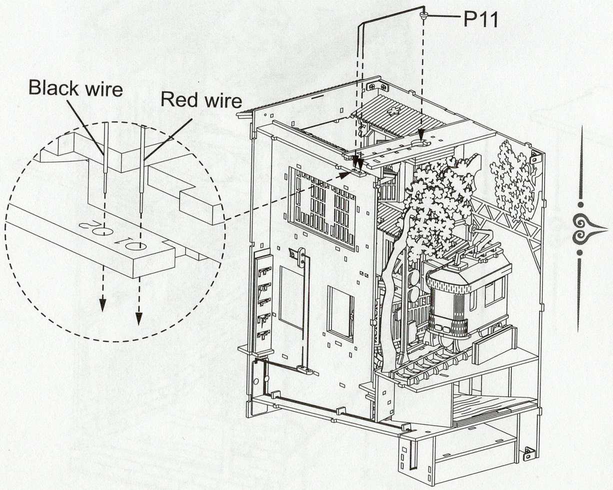
P11
Black wire
Red wire

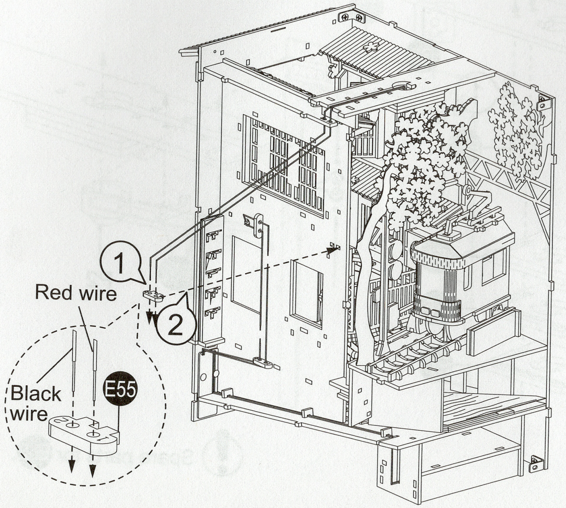
①
②
Red wire
Black wire
E55

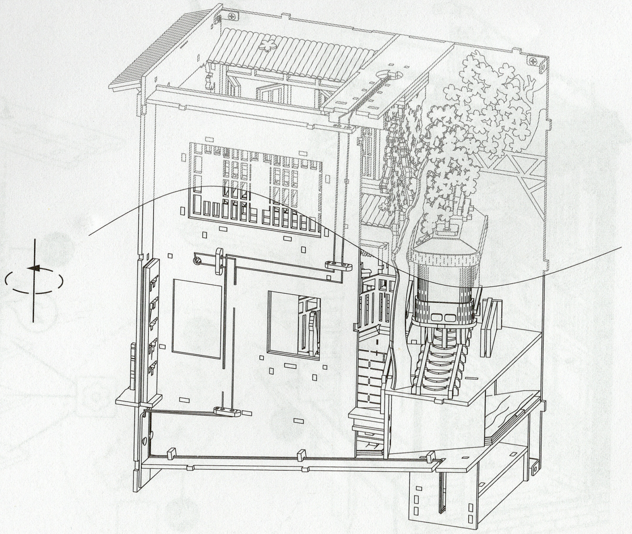

❗ Perspective conversion.

29

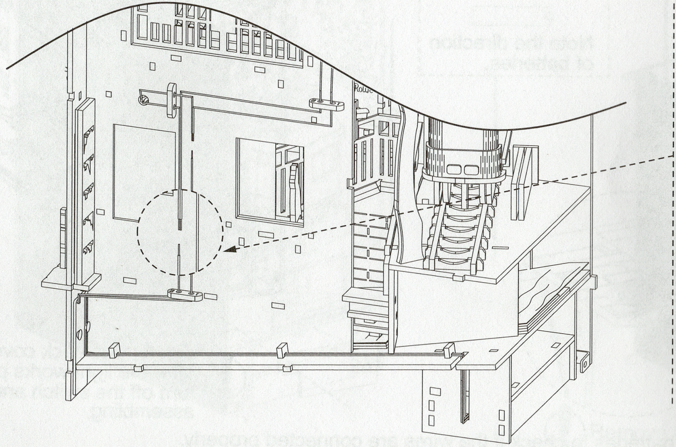

The black wire of light beads.

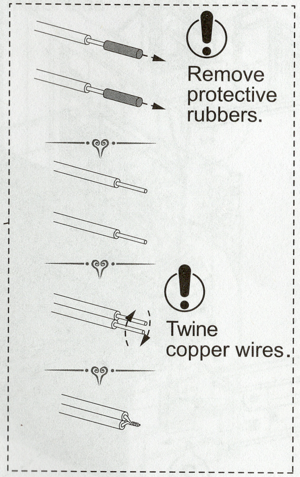

Remove protective rubbers.

Twine copper wires.

Connect with the black wires of battery box.

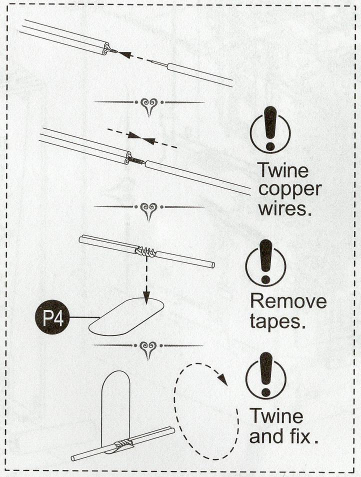

Twine copper wires.

Remove tapes.

Twine and fix.

Complete.

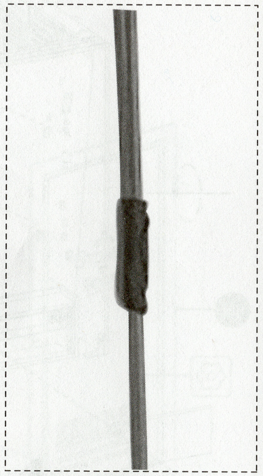

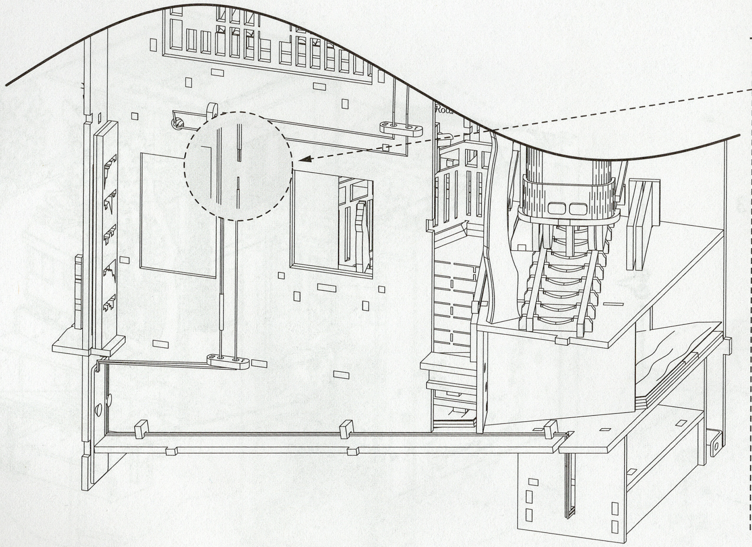

The red wire of light beads.

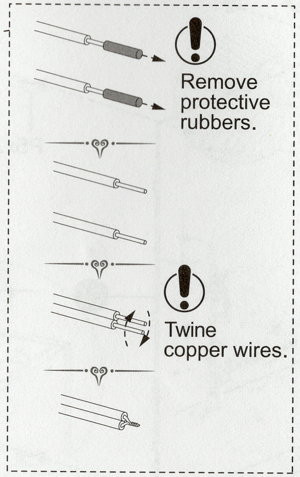

Remove protective rubbers.

Twine copper wires.

Connect with the red wires of battery box

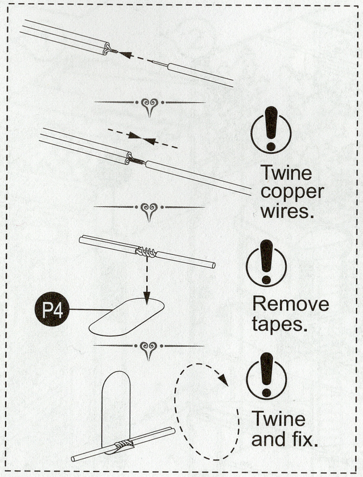

Twine copper wires.

Remove tapes.

Twine and fix.

Complete.

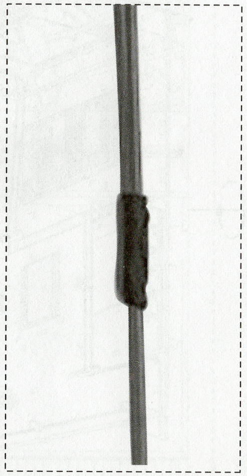

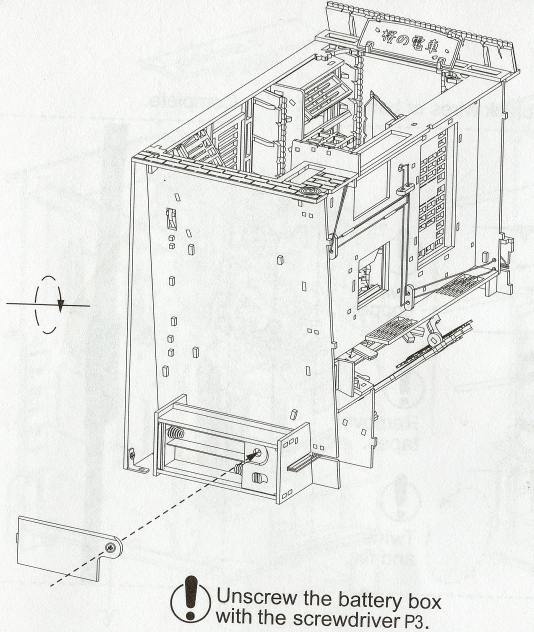

Unscrew the battery box with the screwdriver P3.

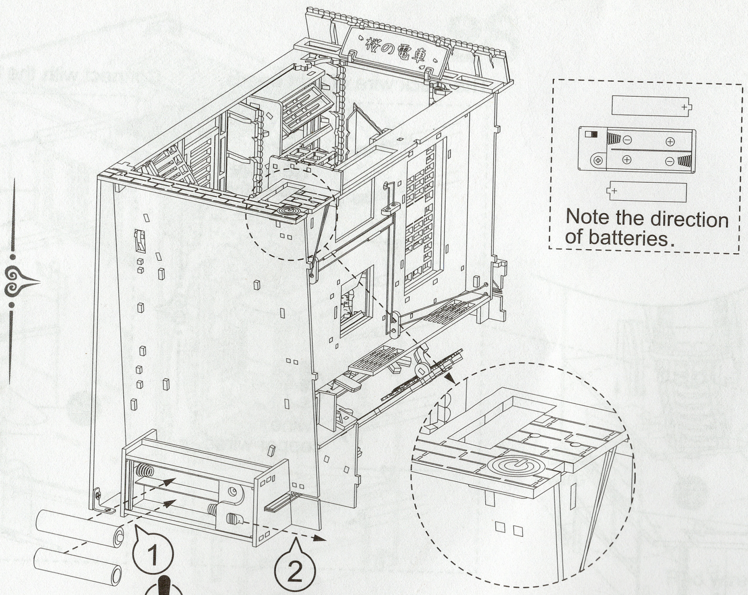

Note the direction of batteries.

Touch the switch after loading batteries to check if the wires are connected properly.

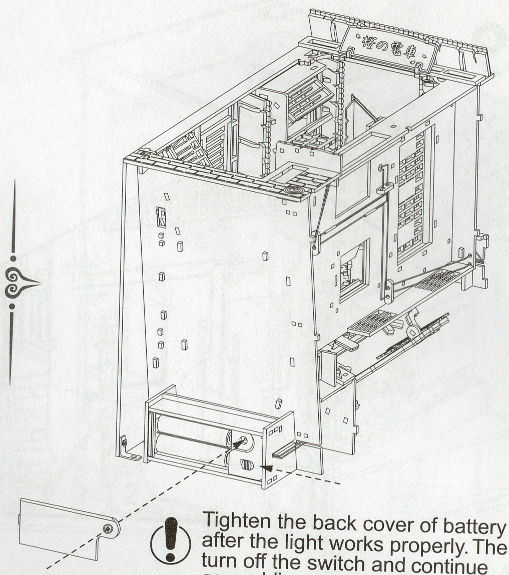

Tighten the back cover of battery box after the light works properly. Then turn off the switch and continue assembling.

30

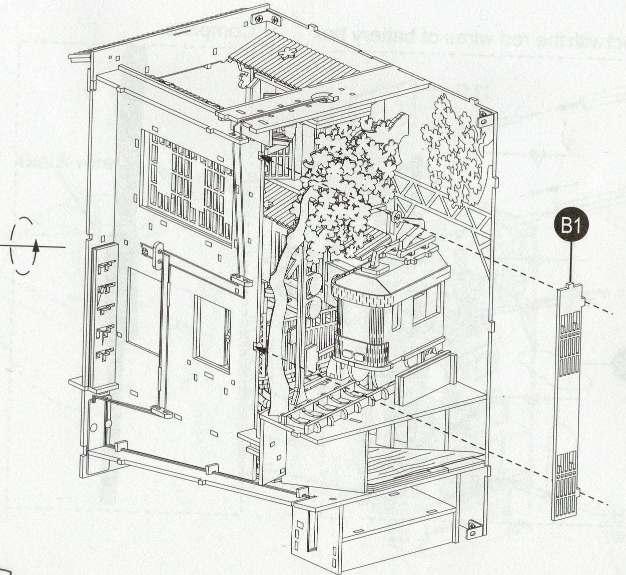

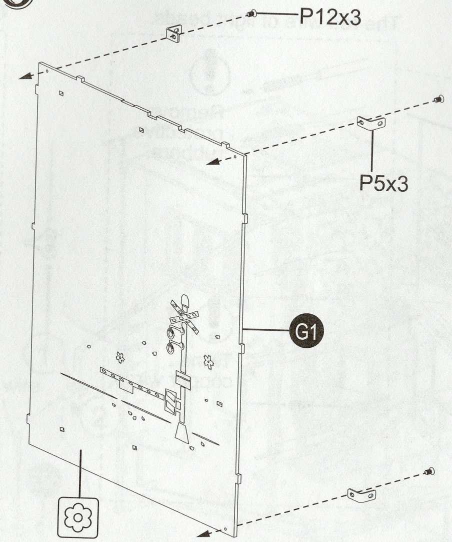

Don't screw it too tightly.

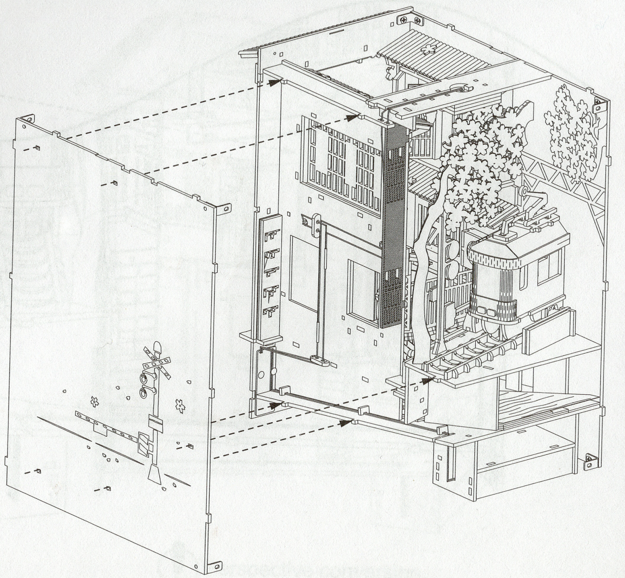

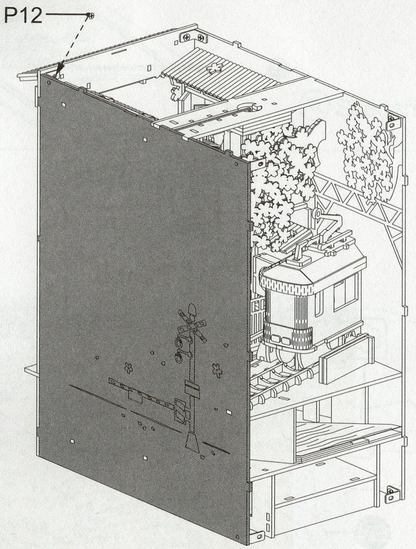

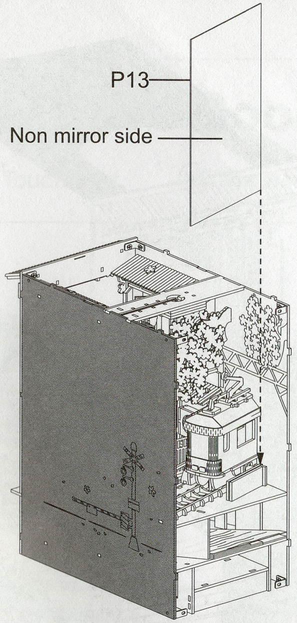
P13
Non mirror side

Remove the film before assembling.

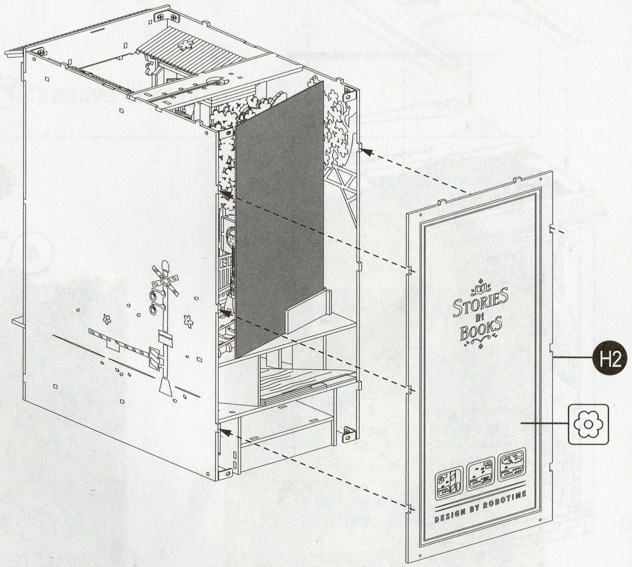
STORIES IN BOOKS
DESIGN BY ROBOTIME
H2

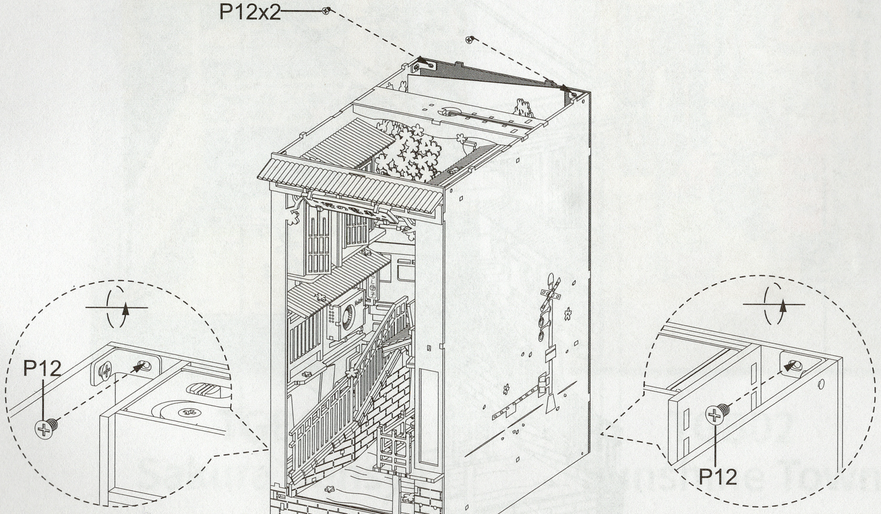
P12x2
P12
P12

Adjust the angle iron's position and
tighten screws on both sides.

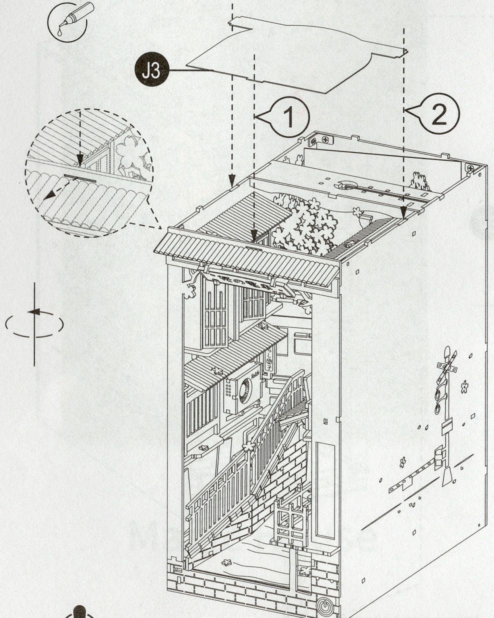

Remove the film of J3 before assembling.

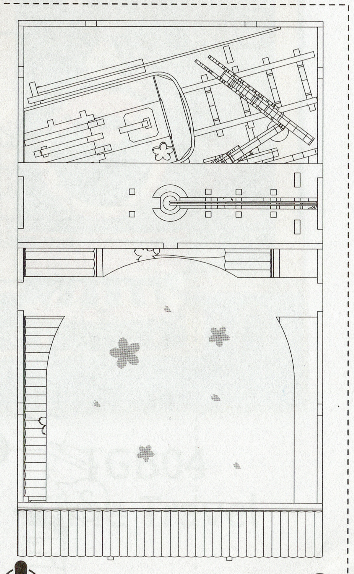

Note the direction of petals J3.

31

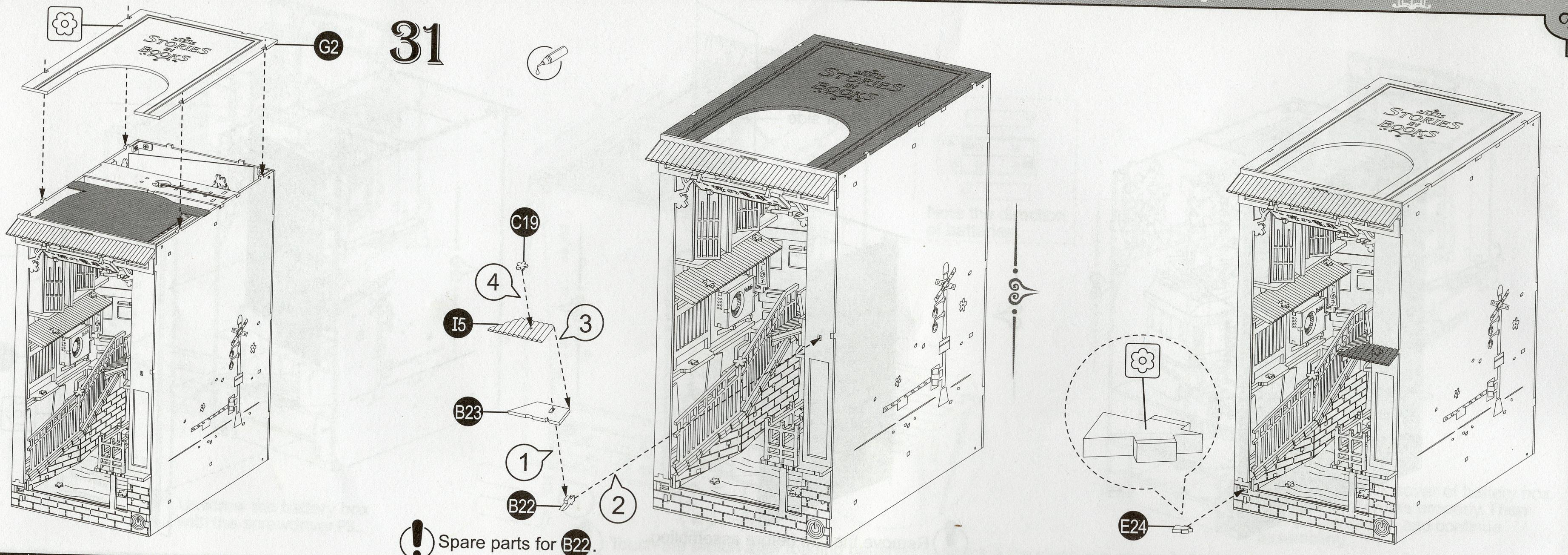
G2
STORIES IN BOOKS
C19
4
I5
3
B23
1
B22
2
E24

Spare parts for B22.

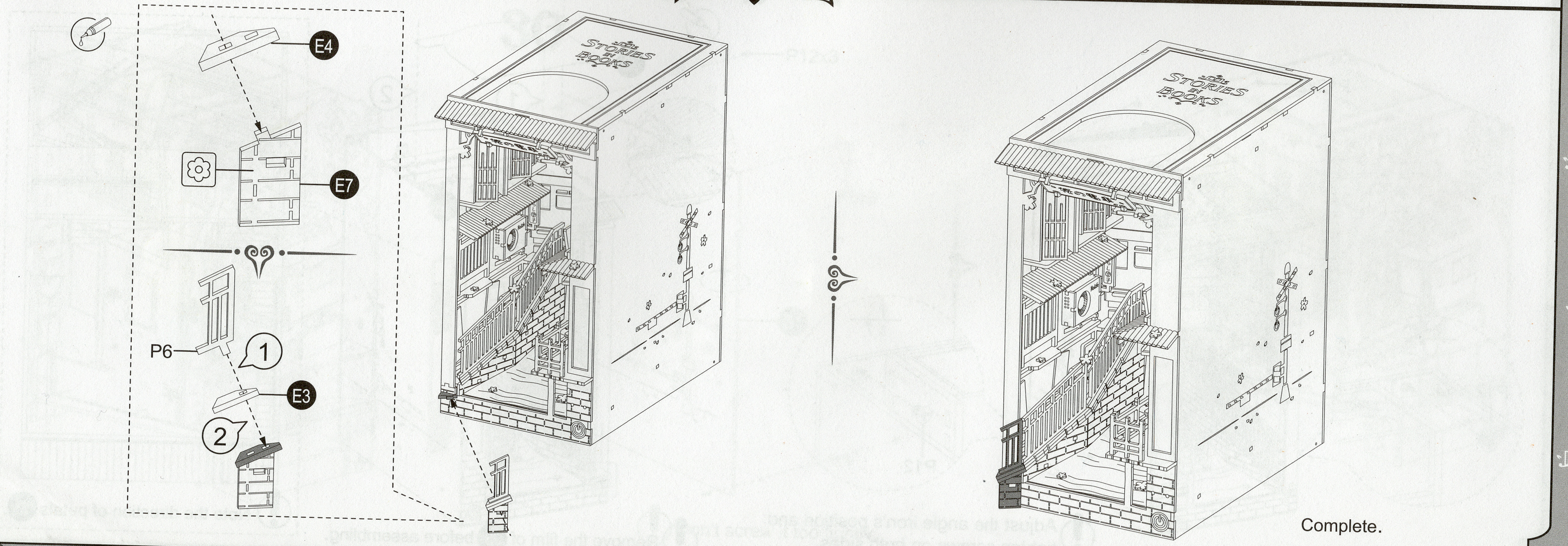
E4
E7
P6
1
E3
2
STORIES IN BOOKS

Complete.

3D Creative Bookends

Scenario simulation Touch light The world in books Creative display

TGB01
Sakura Densya

SUNSHINE TOWN
BOOK SHOP
BOOK SHOP
POST

TGB02
Sunshine Town

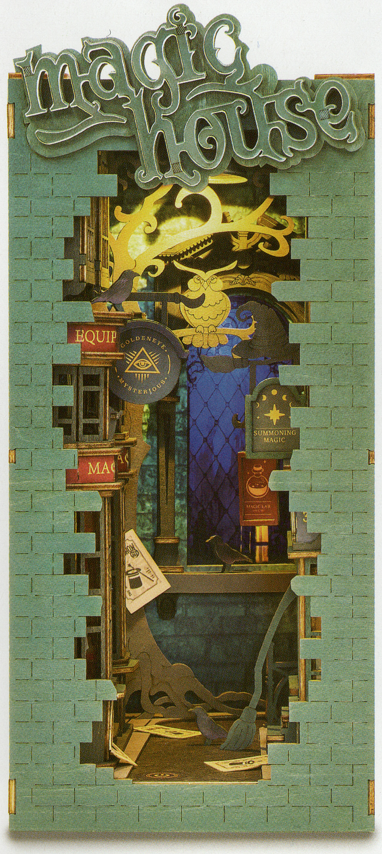
magic house
EQUIP
SUMMONING MAGIC

TGB03
Magic House

Time Travel
Welcome to time station
TIME TRAVEL

TGB04
Time Travel

MANUFACTURER:
Robotime C&C (Jiangsu) Co., Ltd.

ADDRESS:
No. 18 Changxing Road, Shuyang, Suqian City, Jiangsu Province, China

Designed by ROBOTIME
www.robotime.com
MADE IN CHINA

49.1TGB01.100.B